Scenic Regional Library

Wright City Branch
60 Wildcat Drive
Wright City, MO 63390

EAST ELEVATION
(WILDCAT DR. ENTRY)

DRAWING INDEX

A-000	COVER SHEET
T0	CIVIL TITLE SHEET
T1	TOPOGRAPHIC SURVEY
C1	DEMOLITION PLAN
C2	SITE PLAN
C3	GRADING PLAN
C4	UTILITY PLAN
D1	DETAIL SHEET
D2	DETAIL SHEET
L-1.0	LANDSCAPE SITE PLAN
A-001	SYMBOLS AND ABBREVIATIONS
A-002	LIFE SAFETY PLAN
A-101	ARCHITECTURAL SITE PLAN
A-102	ENLARGED ROOF PLANS AND ROOF DETAILS
A-103	SITE DETAILS
A-201	FLOOR PLAN - FIRST FLOOR
A-301	ENLARGED FLOOR PLANS
A-302	ENLARGED FLOOR PLANS
A-401	RCP - FIRST FLOOR
A-402	ENLARGED CEILING PLANS
A-501	FINISH PLAN / LEGEND
A-502	ENLARGED FINISH PLANS
A-601	ELEVATIONS - EXTERIOR
A-602	ELEVATIONS - INTERIOR
A-603	ELEVATIONS - INTERIOR
A-604	ELEVATIONS - INTERIOR
A-605	ELEVATIONS - INTERIOR
A-606	ELEVATIONS - INTERIOR
A-701	BUILDING SECTIONS & BIRDS EYE SECTION VIEW
A-702	WALL SECTIONS
A-703	WALL SECTIONS
A-704	WALL SECTIONS
A-705	WALL SECTIONS
A-801	DETAILS - PLAN
A-802	DETAILS - PLAN
A-803	DETAILS - BUILDING
A-804	DETAILS - BUILDING

DRAWING INDEX

A-805	DETAILS - BUILDING
A-806	DETAILS
A-807	DETAILS
A-808	DETAILS
A-809	DETAILS - MILLWORK
A-810	DETAILS - MILLWORK
A-901	DOOR SCHEDULE / DOOR, FRAME AND WINDOW TYPES
A-902	FRAME DETAILS
A-903	PARTITION TYPES
F-101	FURNITURE PLAN - FIRST FLOOR
S-100	GENERAL NOTES
S-101	GENERAL NOTES
S-102	TYPICAL DETAILS
S-103	TYPICAL DETAILS
S-104	TYPICAL DETAILS
S-201	FOUNDATION PLAN
S-202	ROOF FRAMING PLAN
S-300	FOUNDATION SECTIONS
S-400	FRAMING SECTIONS
S-500	BRACE FRAME ELEVATIONS
S-600	COLUMN SCHEDULE & DETAILS
M-001	LEGEND, SYMBOLS, NOTES & ABBREVIATIONS - MECH.
M-201	FLOOR PLAN - MECHANICAL
M-801	DETAILS - MECHANICAL
M-901	SCHEDULE & SECTIONS - MECHANICAL
P-001	LEGEND, SYMBOLS, NOTES & ABBREVIATIONS - PLUMB.
P-200	FLOOR PLAN - FOUNDATION - PLUMBING
P-201	FLOOR PLAN - PLUMBING
P-801	DETAILS - PLUMBING
E-001	LEGEND, SYMBOLS, NOTES & ABBREVIATIONS - ELEC.
E-100	SITE PLAN - ELECTRICAL
EL-201	FLOOR PLAN & LIGHT FIXTURE SCHEDULE - ELECTRICAL LIGHTING
EP-301	FLOOR PLAN, ONE LINE & SCHEDULE - ELECTRICAL POWER
E-401	FLOOR PLAN - ELECTRICAL DATA
E-801	DETAILS - ELECTRICAL
E-901	SCHEDULES - ELECTRICAL

CODE INFORMATION

AUTHORITIES HAVING JURISDICTION:	CITY OF WRIGHT CITY, MO (WARREN COUNTY) WRIGHT CITY FIRE PROTECTION DISTRICT
BUILDING CODE:	INTERNATIONAL BUILDING CODE (IBC) 2009 EDITION
ACCESSIBILITY:	AMERICANS WITH DISABILITIES ACT ICC/ANSI A117.1, REFERENCED BY BUILDING CODE
FIRE PREVENTION:	INTERNATIONAL FIRE CODE (IFC) 2009 EDITION
MECHANICAL:	INTERNATIONAL MECHANICAL CODE (IMC) 2009 EDITION
ELECTRICAL:	NATIONAL ELECTRICAL CODE, 2008 EDITION, WITH CITY ADDITIONS.
PLUMBING:	INTERNATIONAL PLUMBING CODE (IPC) 2009 EDITION
PROPERTY MAINTENANCE:	INTERNATIONAL PROPERTY MAINTENANCE CODE (IPMC) 2009 EDITION.

BUILDING INFORMATION

USE GROUPS
A-3 ASSEMBLY, LIBRARY
S-1 MODERATE HAZARD STORAGE (ACCESSORY USE, SEE LIFE SAFETY PLAN, SHEET A-002)

CONSTRUCTION TYPE:
TYPE IIB NON-SPRINKLERED, NOT PROTECTED

SEISMIC CATEGORY:
C REFER TO CISCA GUIDELINES FOR REQUIREMENTS

AREA:

FLOOR:	ACTUAL GSF	DESIGN OCCUPANCY:
FIRST FLOOR	7,695 SF	195 OCCUPANTS

ALLOWABLE HEIGHT AND AREA:
USE GROUP A-3 IS MOST RESTRICTIVE USE.
ALLOWABLE HEIGHT AND AREA, IBC TABLE 503 - 2 STORIES AND 9,500 SF.

RATINGS

ELEMENT:	RATING:
COLUMN	0 HOUR
CORRIDOR	0 MINUTE
DOOR	0 MINUTE
FLOOR	0 HOUR
STORAGE	0 HOUR

VICINITY MAP

NORTH

LOCATOR MAP

NORTH

ARCHITECT-OF-RECORD

JEMA
3005 LOCUST ST.
ST. LOUIS, MO 63103
T (314) 531-7400
CONTACT: SCOTT CLARK
E-MAIL: SCLARK@JEMASTL.COM

DESIGN ARCHITECT

SAPP DESIGN ASSOCIATES ARCHITECTS
3750 SOUTH FREMONT
SPRINGFIELD, MO 65804
T (417) 877-9600
F (417) 877-9696
CONTACT: JAMES STUFFLEBEAM
E: STUFFLEBEAM@SDAARCHITECTS.COM

CIVIL ENGINEER

COCHRAN ENGINEERING
530A EAST INDEPENDENCE DRIVE
UNION, MO 63084
T (636) 584-0540
F (636) 584-0512
CONTACT: DAVE VAN LEER
E-MAIL: DVANLEER@COCHRAN.COM

STRUCTURAL ENGINEER

ALPER AUDI, INC.
1804 BORMAN CIRCLE DRIVE
ST. LOUIS, MO 63146
T (314) 432-8600
CONTACT: STEVE EHRETT
E-MAIL: STEVE.EHRETT@ALPERAUDI.COM

MECHANICAL, ELECTRICAL, PLUMBING ENGINEER

BRIC PARTNERSHIP, LLC
138 WEST ADAMS
KIRKWOOD, MO 63122
T (314) 725-5889
CONTACT: BRUCE COLEMAN
E: BCOLEMAN@BRICPARTNERSHIP.COM

Scenic Regional Library
read, explore, grow

SCENIC REGIONAL LIBRARY
WRIGHT CITY BRANCH
60 WILDCAT DRIVE
WRIGHT CITY, MO 63390

JEMA
SDA ARCHITECTS

ARCHITECT-OF-RECORD
JEMA
3005 LOCUST ST.
ST. LOUIS, MO 63103
T (314) 531-7400
CONTACT: SCOTT CLARK
E-MAIL: SCLARK@JEMASTL.COM

DESIGN ARCHITECT
SAPP DESIGN ASSOCIATES ARCHITECTS
3750 SOUTH FREMONT
SPRINGFIELD, MO 65804
T (417) 877-9600
F (417) 877-9696
CONTACT: JAMES STUFFLEBEAM
E: STUFFLEBEAM@SDAARCHITECTS.COM

CIVIL
COCHRAN
530A E. INDEPENDENCE DRIVE
UNION, MO 63084
CONTACT: DAVE VAN LEER
T (636) 584-0540
F (636) 584-0512
E-MAIL: DVANLEER@COCHRAN.COM

STRUCTURAL
ALPER AUDI, INC.
1804 BORMAN CIRCLE DRIVE
ST. LOUIS, MO 63146
T (314) 432-8600
F (314) 807-2774
CONTACT: STEVE EHRETT
E-MAIL: STEVE.EHRETT@ALPERAUDI.COM

MECHANICAL, ELECTRICAL, PLUMBING
BRIC PARTNERSHIP, LLC
343 S. KIRKWOOD ROAD, SUITE 204
KIRKWOOD, MO 63122
T (314) 725-5889
CONTACT: BRUCE COLEMAN
E: BCOLEMAN@BRICPARTNERSHIP.COM

ARCHITECT OF RECORD:

JOHN EDWARD MUELLER
MO ARCHITECTURAL LICENSE A2010039554
MO CERTIFICATE OF AUTHORITY A2014008380

No.	Date	Description
	06/13/17	ISSUED FOR RE-BID

DRAWN BY: **SC/SH**

PROJECT NUMBER: **16-1161.03**

SHEET TITLE:
COVER SHEET

A-000

SITE IMPROVEMENT PLANS
FOR
SCENIC REGIONAL LIBRARY
IN THE
CITY OF WRIGHT CITY, MISSOURI
60 WILDCAT DRIVE

CONTACT INFORMATION

OWNER

OWNER: SCENIC REGIONAL LIBRARY

REPRESENTATIVE: STEVEN CAMPBELL (DIRECTOR)

ADDRESS: 304 HAWTHORNE DR. UNION, MO

PHONE: (636) 583-0652

WATER/SEWER

OWNER: CITY OF WRIGHT CITY

REPRESENTATIVE: LARRY JANESH

ADDRESS: 203 VETERANS MEMORIAL PKWY, WRIGHT CITY, MO

PHONE: (636) 236-1687

ELECTRIC

OWNER: CUIVRE RIVER ELECTRIC CO-OP

REPRESENTATIVE: DAN SCHNEIDER

ADDRESS: 8757 HWY N, LAKE ST. LOUIS, MO

PHONE: (636) 695-4741

GAS

OWNER: AMEREN

REPRESENTATIVE: AMY TWELLMANN

ADDRESS: 200 N. CALLAHAN RD. WENTZVILLE, MO

PHONE: (636) 639-8305

TELEPHONE

OWNER: CHARTER COMMUNICATIONS

REPRESENTATIVE: LISA WARD

ADDRESS: -

PHONE: (314) 386-1634

SPECIAL NOTES :

FOR QUESTIONS OR CLARIFICATION PLEASE CONTACT

DAVID VAN LEER AT COCHRAN. PHONE #636-584-0540

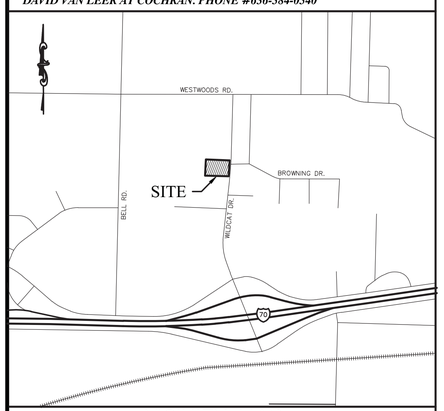

VICINITY MAP
NO SCALE

UTILITY RESPONSIBILITY MATRIX FOR THIS PROJECT

	UTILITY/ GOVERNING AGENCIES CONTACTS	CONTRACTOR RESPONSIBILITY–	OTHERS RESPONSIBILITY–
WATER & SEWER	CITY OF WRIGHT CITY 203 VETERANS MEMORIAL PKWY, WRIGHT CITY, MO CONTACT: LARRY JANESH PHONE: (636) 236–1687	–PERFORMS WATER MAIN TAP AND SETS ALL WATER METER APPURTENANCES. –PLACES SERVICE LINE FROM EXISTING WATER MAIN TO BUILDING.	–NOTHING
TELEPHONE	CHARTER COMMUNICATIONS – – CONTACT: LISA WARD PHONE: (314) 386–1634	–INSTALL CONDUIT FROM EXISTING UNDERGROUND TELEPHONE TO BUILDING.	–CONNECT TO EXISTING UNDERGROUND TELEPHONE.
ELECTRIC	CUIVRE RIVER ELECTRIC CO–OP 8757 HWY N, LAKE ST. LOUIS, MO CONTACT: DAN SCHNEIDER PHONE: (636) 695–4741	–PLACE CONDUIT AND MULE TAPE FROM EXISTING TO TRANSFORMER. –PREPARES TRANSFORMER PAD. –PLACE CONDUIT AND WIRE FROM TRANSFORMER TO BUILDING. –PLACE BOLLARD PROTECTION WHERE REQUIRED	–PROVIDES AND INSTALLS WIRE FROM EXISTING TO TRANSFORMER. –PROVIDES TRANSFORMER. –PROVIDES METER BASES
GAS	AMEREN 200 N. CALLAHAN RD. WENTZVILLE, MO CONTACT: AMY TWELLMANN PHONE: (636) 639–8305	–INSTALL ALL GAS LINES ON BUILDING SIDE OF GAS METER AND CONNECT TO METER.	–TRENCH, INSTALL, AND BACKFILL GAS LINES FROM GAS MAIN CONNECTION UP TO METER. –SUPPLY AND INSTALL GAS METER.

THIS MATRIX HAS BEEN PROVIDED FOR INFORMATIONAL PURPOSES. THE CONTRACTOR SHALL PROVIDE ANY AND ALL APPURTENANCES, TRENCHING AND BACKFILL, AND OTHER INCIDENTALS TO MEET OR EXCEED THE SPECIFICATIONS OF THE ITEMS LISTED.

PROJECT NO. 16–6414

COCHRAN

- CIVIL ENGINEERING
- LAND SURVEYING
- ARCHITECTURE
- SITE DEVELOPMENT
- MASTER PLANNING
- GENERAL CONSULTING

530A E. INDEPENDENCE DRIVE, UNION, MISSOURI 63084
TELEPHONE (636) 584–0540
FAX (636) 584–0512
E–MAIL mail@cochraneng.com

APRIL, 2017

SHEET INDEX	SHEET
TOPOGRAPHIC SURVEY	T1
DEMOLITION PLAN	C1
SITE PLAN	C2
GRADING PLAN	C3
UTILITY PLAN	C4
DETAIL SHEET	D1
DETAIL SHEET	D2

STATE OF MISSOURI
DAVID P. VAN LEER
NUMBER PE-2012018147
PROFESSIONAL ENGINEER
4/14/17

David P. Van Leer No. PE–2012018147
Registered Professional Engineer
State of Missouri for Cochran

Two working days prior to the start of any excavation on this site, contractor shall call 1–800–DIG–RITE for utility location information.

All OSHA rules & regulations established for the type of construction required by these plans shall be strictly followed (ie. Trenching, Blasting, etc.)

TOPOGRAPHIC SURVEY

LOT 1 OF WRIGHT CITY SCHOOL AND LIBRARY PLAT LOCATED IN
SECTION 17, TOWNSHIP 47 NORTH, RANGE 1 WEST OF 5TH P.M.
WARREN COUNTY, MISSOURI
(THIS DOES NOT CONSTITUTE A BOUNDARY SURVEY)

LEGEND

- 500 — INDEX CONTOUR
- INTERMEDIATE CONTOUR
- PROPERTY LINE
- R/W — RIGHT-OF-WAY
- BUILDING SETBACK
- EASEMENT
- AE — AERIAL ELECTRIC
- UTILITY POLE / GUY WIRE
- UGE — UNDERGROUND ELECTRIC
- UGT — UNDERGROUND TELEPHONE
- SAN — SANITARY SEWER
- SANITARY MANHOLE
- SS — STORM SEWER
- INLET
- GRATED INLET
- G — GAS LINE
- GM — GAS METER
- W — WATER LINE
- FIRE HYDRANTS
- YARD HYDRANT
- WATER VALVE
- B-# — BOREHOLE
- ELECTRIC METER (EM)
- WATER METER (WM)
- GAS VALVE (GV)
- SANITARY SEWER VALVE (S)
- SIGN
- LIGHT
- TREELINE
- FENCE
- FIBEROPTIC — FO
- BUSH
- CONIFEROUS TREE
- DECIDUOUS TREE
- CONCRETE PAVEMENT
- GRAVEL SURFACE
- ASPHALT PAVEMENT

Notes:

1. North derived from the Plat of Wright City School and Library Plat recorded as Document #201503654 of the Warren county records.
2. No investigation has been performed by Cochran regarding hazardous waste, underground conditions or utilities affecting the tract shown hereon.
3. This survey does not constitute a title search by the Land Surveyor.
4. Project Benchmark is top of USGS Disk Stamped WRIGHT and is located 26 feet North of the Centerline of Westwoods Road and 71 feet West of the Centerline of Bell Rd. in Warren County, MO

   Site Benchmark is a chiseled square on the corner of the existing sidewalk. Elevation = 747.71
5. Underground structures, facilities, and utilities have been plotted from available plans and observed evidence along with locates from local utility companies and Missouri One Call. Their locations must be considered approximate only and there may be others, the existence of which is presently not known.

   NOTE: The waterline shown on the East side of Wildcat Drive was not located in the field. Waterline shown is per information provided by Wright City
6. This property lies within Zone X "areas determined to be outside of the 0.2% annual chance floodplain", per Flood Insurance Rate Map, Warren County, Missouri and Incorporated Areas, Map Number 29219C0158D, Effective date November 4, 2009.
7. Missouri One Call Ticket No. : #161113170.

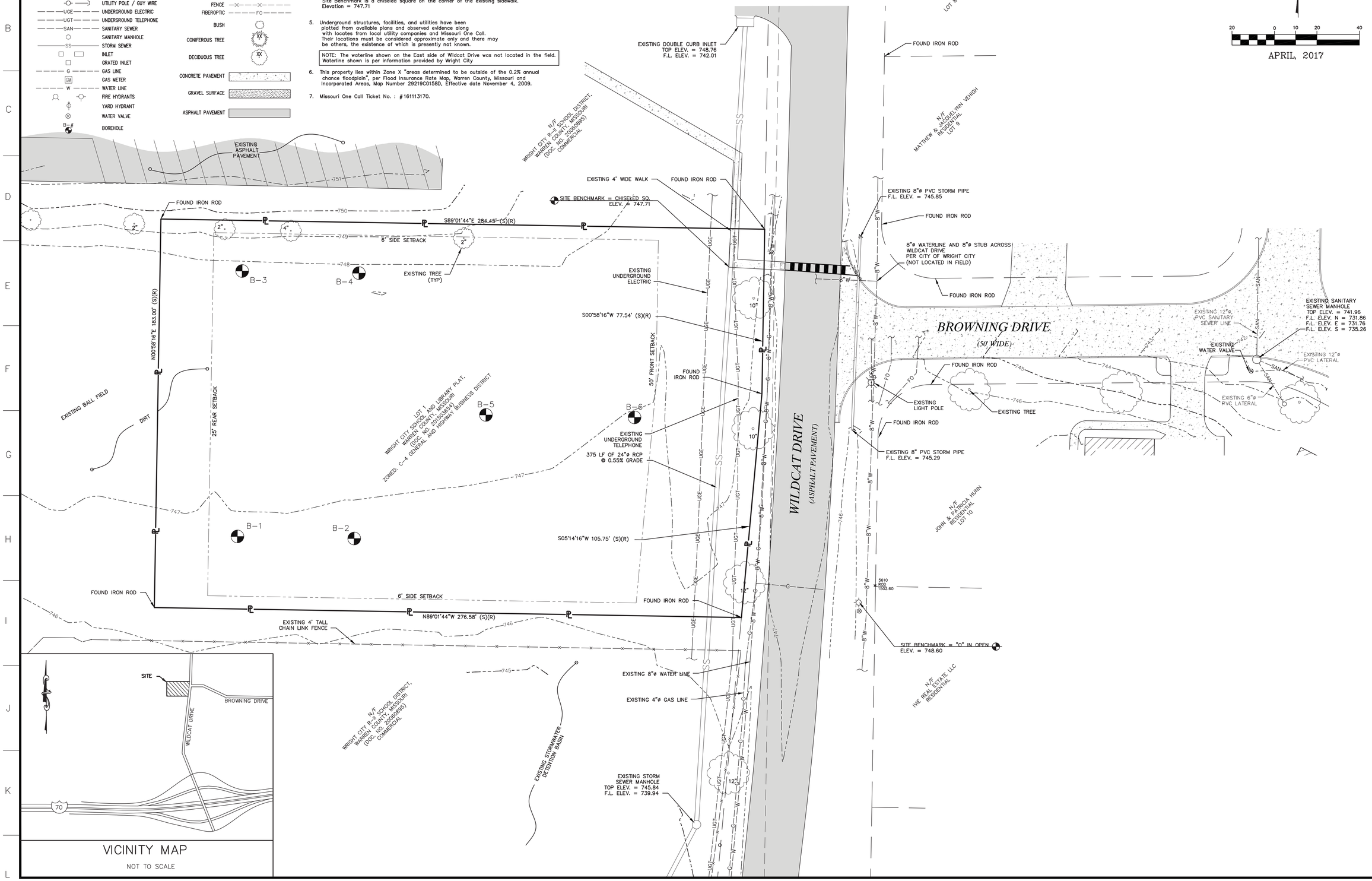

VICINITY MAP

NOT TO SCALE

20 0 10 20 40

APRIL, 2017

636-584-0540 (tel.)
636-584-0512 (fax)
mail@cochranengineering.com
530A E. Independence Dr.
Union, Missouri 63084
COCHRAN
• Civil Engineering
• Land Surveying
• Architecture
• Site Development
• General Consulting
• Master Planning

Missouri State Certificate of Authority Numbers:
Survey : 000380
Engineering : 001655
Architecture: 2002014240

Two working days prior to the start of any excavation on this site, contractor shall call Missouri One Call for utility location information.

All OSHA rules & regulations established for the type of construction involved in these plans shall be strictly followed (ie. Trenching, Blasting, etc.)

STATE OF MISSOURI
DAVID P. VAN LEER
NUMBER PE-2012018147
4/14/17
PROFESSIONAL ENGINEER

David P Van Leer, PE
MO# PE-2012018147

SITE IMPROVEMENT PLANS
SCENIC REGIONAL LIBRARY
WRIGHT CITY, MISSOURI

DATE:	REVISION:	DRN. BY:	APPD. BY:
04-14-17	ISSUED FOR BID	TES	DPV

TOPOGRAPHIC SURVEY

DRN. BY:	APPD. BY:
KJL	DPV

DATE: APR. 14, 2017

SCALE: 1" = 20'

PROJ. NO: 16-6414

DWG. NO: T1

Drawing name: F:\16-6414 - Scenic Regional Library - Wright City\AutoCAD Drawings\Plan Sheets\Topographic Survey.dwg Tab: 24X36 Plotted on: Apr 12, 2017 - 1:08pm Plotted by: rjohanning

DEMOLITION PLAN

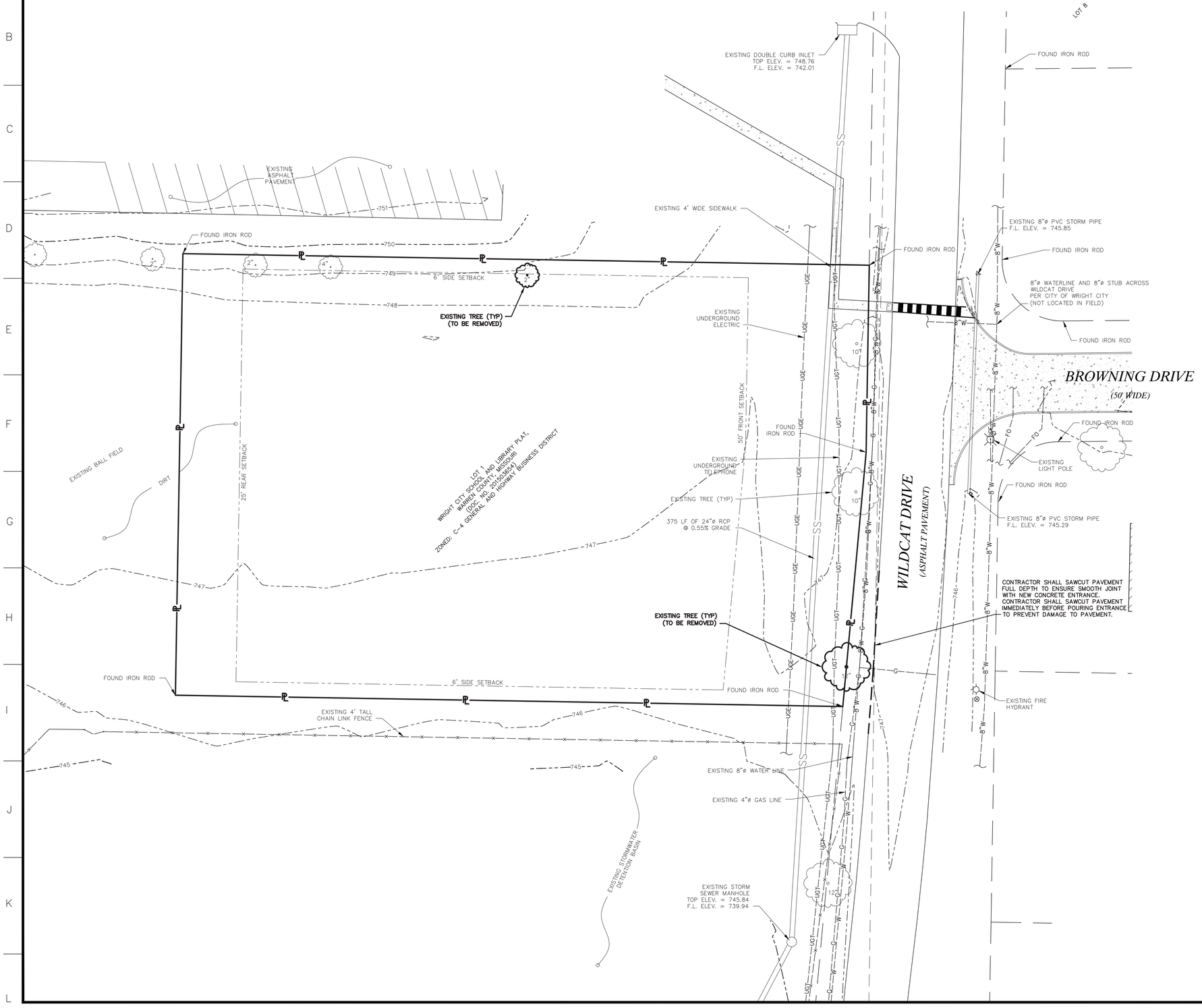

20 0 10 20 40

APRIL, 2017

LEGEND

500	INDEX CONTOUR
	INTERMEDIATE CONTOUR
PL	PROPERTY LINE
R/W	RIGHT-OF-WAY
	BUILDING SETBACK
	EASEMENT
AE	AERIAL ELECTRIC
	UTILITY POLE / GUY WIRE
UGE	UNDERGROUND ELECTRIC
UGT	UNDERGROUND TELEPHONE
SAN	SANITARY SEWER
	SANITARY MANHOLE
SS	STORM SEWER
	INLET
	GRATED INLET
G	GAS LINE
GM	GAS METER
W	WATER LINE
	FIRE HYDRANTS
	YARD HYDRANT
	WATER VALVE
B-#	BOREHOLE
	ELECTRIC METER
	WATER METER
	GAS VALVE
	SANITARY SEWER VALVE
	SIGN
	LIGHT
	TREELINE
	FENCE
FO	FIBEROPTIC
	BUSH
	CONIFEROUS TREE
	DECIDUOUS TREE
	CONCRETE PAVEMENT
	GRAVEL SURFACE
	ASPHALT PAVEMENT

DEMOLITION PLAN NOTES

1. The sitework on this project shall meet or exceed the City of Wright City standards and specifications.
2. North derived from the Plat of Wright City School and Library Plat recorded as Document #201503654 of the Warren county records.
3. Project Benchmark is top of USGS Disk Stamped WRIGHT and is located 26 feet North of the Centerline of Westwoods Road and 71 feet West of the Centerline of Bell Rd. in Warren County, MO

   Site Benchmark is a chiseled square on the corner of the existing sidewalk. Elevation = 747.71
4. Site is zoned "C-4" General and Highway Business Districts per the City of Wright City Zoning Map.
5. This property is within Zone X "areas determined to be outside of the 0.2% annual chance floodplain", per Flood Insurance Rate Map, Warren County, Missouri and Incorporated Areas, Map Number 29219C0158D, Effective date November 4, 2009.
6. In accordance with generally accepted construction practices, the Contractor will be solely and completely responsible for conditions of the job site, including safety of all persons and property during performance of the work. This requirement will apply continuously and not be limited to normal working hours. Contractor will be responsible for providing and maintaining all barricades, warning signs, flashing lights and traffic control devices during construction. Contractor to comply with all OSHA regulation requirements and safety meeting requirement.
7. Underground structures, facilities and utilities have been plotted from available surveys and records. Therefore, their locations must be considered approximate only. There may be others, the existence of which is presently not known.
8. Contractor to contact telephone, electric, gas, water and cable companies to have underground utilities located on this site and adjacent to this site prior to doing any excavating.
9. All unsurfaced areas are to receive 4 inches of topsoil. Contractor to seed, mulch, fertilize, and maintain all areas outside of paved areas that were disturbed during construction until an acceptable stand of grass is established. The Contractor shall be responsible to take whatever means necessary to establish permanent soil stabilization.
10. All erosion control shall be in conformance with the City of Wright City.
11. The contractor is responsible for keeping storm water run-off and siltation under control during construction.
12. It shall be the contractor's responsibility to keep all mud and silt on site and off of streets.
13. All survey monuments disturbed during construction shall be replaced by a licensed land surveyor licensed in the state in which this project is located at the Contractor's expense.
14. Contractor shall be responsible to remove any basements, wells, utility lines, foundations, cisterns, cellars, etc. on site which exist and are within the projects construction area. Contractor is encouraged to visit the site prior to submitting their bid for this project.
15. Contractor shall saw-cut all curb and gutter sections, concrete medians and along pavement where proposed construction ties into existing areas. Contractor shall maintain traffic flow and provide traffic control throughout construction.
16. All demolition, disposal, etc. fees are to be paid by the Contractor.
17. All existing structures, unless otherwise noted to remain, (i.e. fencing, trees, concrete, asphalt pavement, utilities, etc.) within the construction area shall be disposed of in a manner meeting federal, state and local regulations.

5300A E. Independence Dr.
Union, Missouri 63084
636-584-0540 (tel.)
636-584-0512 (fax)
mail@cochraneng.com

COCHRAN

• Civil Engineering
• Land Surveying
• Architecture
• Site Development
• General Consulting
• Master Planning

Missouri State Certificate of Authority Numbers:
Survey : 000380
Engineering : 001655
Architecture: 2002014240

Two working days prior to the start of any excavation on this site, contractor shall call the appropriate for utility location information.

All OSHA rules & regulations established for the type of construction involved in these plans shall be strictly followed (ie. Trenching, Blasting, etc.)

STATE OF MISSOURI
DAVID P. VAN LEER
NUMBER PE-2012018147
4/14/17
PROFESSIONAL ENGINEER

David P Van Leer, PE
MO# PE-2012018147

SITE IMPROVEMENT PLANS
SCENIC REGIONAL LIBRARY
WRIGHT CITY, MISSOURI

DATE:	REVISION:	DRN. BY:	APP'D. BY:
04-14-17	ISSUED FOR BID	TES	DPV

DEMOLITION PLAN

DRN. BY: TES	APP'D. BY: DPV
DATE: APR. 14, 2017	
SCALE: 1" = 20'	
PROJ. NO: 16-6414	
DWG. NO: C1	

Drawing name: F:\16-6414 - Scenic Regional Library - Wright City\AutoCAD Drawings\Plan Sheets\DEMOLITION PLAN.dwg Tab: 24X36 Plotted on: Apr 12, 2017 - 1:06pm Plotted by: rjohanning

SITE PLAN

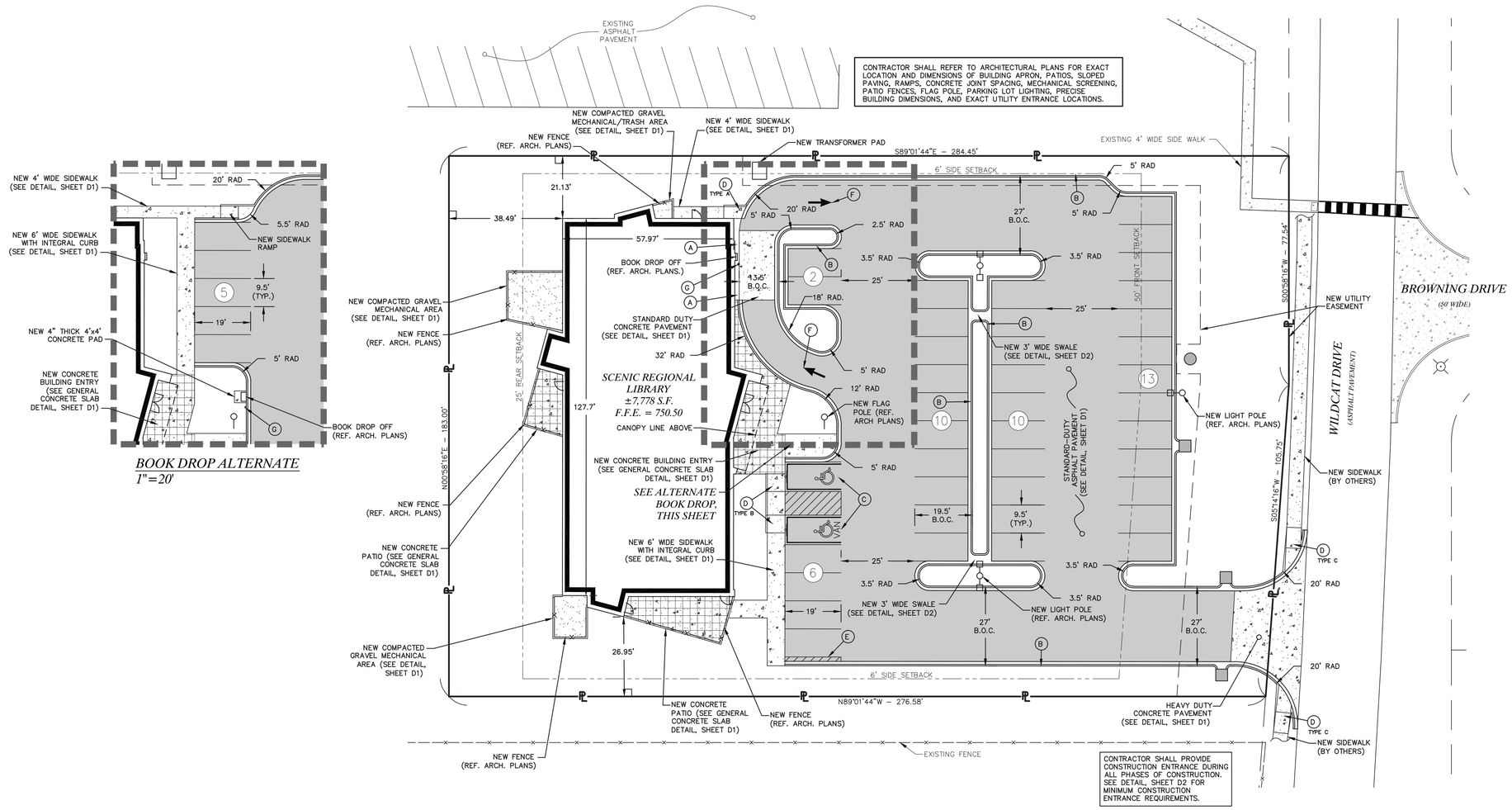

BOOK DROP ALTERNATE
1"=20'

ROLLOUT GARBAGE CAN WILL BE STORED IN SCREENED MECHANICAL AREA.

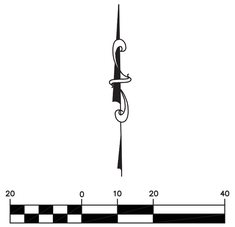

APRIL, 2017

LEGEND

EXISTING	PROPOSED
	PROPERTY LINE
	RIGHT-OF-WAY
	BUILDING SETBACK
	EASEMENT
	SANITARY MANHOLE
	STORM INLET
	FENCE
	LIGHT
	CONCRETE PAVEMENT
	REINFORCED CONCRETE
	ASPHALT PAVEMENT
	GRAVEL

SITE PLAN NOTES

1. The sitework on this project shall meet or exceed the City of Wright City standards and specifications.
2. North derived from the Plat of Wright City School and Library Plat recorded as Document #201503654 of the Warren county records.
3. Project Benchmark is top of USGS Disk Stamped WRIGHT and is located 26 feet North of the Centerline of Westwoods Road and 71 feet West of the Centerline of Bell Rd. in Warren County, MO

   Site Benchmark is a chiseled square on the corner of the existing sidewalk. Elevation = 747.71
4. Site is zoned "C-4" General and Highway Business Districts per the City of Wright City Zoning Map.
5. This property is within Zone X "areas determined to be outside of the 0.2% annual chance floodplain", per Flood Insurance Rate Map, Warren County, Missouri and Incorporated Areas, Map Number 29219C0158D, Effective date November 4, 2009.
6. In accordance with generally accepted construction practices, the Contractor will be solely and completely responsible for conditions of the job site, including safety of all persons and property during performance of the work. This requirement will apply continuously and not be limited to normal working hours. Contractor will be responsible for providing and maintaining all barricades, warning signs, flashing lights and traffic control devices during construction. Contractor to comply with all OSHA regulation requirements and safety meeting requirement.
7. Underground structures, facilities and utilities have been plotted from available surveys and records. Therefore, their locations must be considered approximate only. There may be others, the existence of which is presently not known.
8. All unsurfaced areas are to receive 4 inches of topsoil. Contractor to seed, mulch, fertilize, and maintain all areas outside of paved areas that were disturbed during construction until an acceptable stand of grass is established. The Contractor shall be responsible to take whatever means necessary to establish permanent soil stabilization.
9. See landscaping plans for landscaping requirements.
10. All dimensions are to back of curb unless otherwise noted.
11. Contractor shall saw cut all curb and gutter sections, concrete medians and along pavement where new construction ties into existing areas. Contractor shall maintain traffic flow and provide traffic control throughout construction.
12. Parking is to be striped with 4" wide painted yellow lines as indicated.
13. Refer to architectural plans for exact building dimensions and exact utility entrance locations.

SITE LEGEND

- (A) 18" CONCRETE CURB. (SEE 18" CONCRETE CURB DETAIL, SHEET D1)
- (B) 18" CONCRETE CURB AND GUTTER TYPICAL. (SEE 18" CONCRETE CURB AND GUTTER DETAIL, SHEET D1)
- (C) ACCESSIBLE PARKING SPACE TYPICAL. SEE "PARKING LOT STRIPING DETAILS," SHEET D1 FOR ACCESSIBLE PARKING SPACE SIZE, SIGN AND SYMBOL ("VAN" – INDICATES VAN ACCESSIBLE SPACE)
- (D) NEW ADA RAMP (SEE DETAIL, SHEET D1)
- (E) PAINTED PAVEMENT STRIPING. STRIPES SHALL BE PAINTED 4" WIDE SOLID YELLOW LINE AT 2'–0" O.C. AT 45°.
- (F) PAINTED DIRECTIONAL "TRAFFIC FLOW ARROW", TYPICAL (SEE DETAIL, SHEET D1)
- (G) NEW PIPE BOLLARD (SEE DETAIL, SHEET D1)

SITE DATA

LIBRARY TRACT	1.19 AC.±

PARKING DATA

BUILDING	7,778 S.F.
STANDARD SPACES	39 SPACES
ACCESSIBLE SPACES	2 SPACES
TOTAL PARKING SPACES	41 SPACES
PARKING RATIO	5.27/1000 S.F.
REQ'D PARKING RATIO	5.00/1000 S.F.

PARKING DATA (ALTERNATE BOOK DROP)

STANDARD SPACES	42 SPACES
ACCESSIBLE SPACES	2 SPACES
TOTAL PARKING SPACES	44 SPACES

OCHRAN
530A E. Independence Dr.
Union, Missouri 63084
636-584-0540 (tel.)
636-584-0512 (fax)
mail@ochraneng.com
• Civil Engineering
• Land Surveying
• Architecture
• Site Development
• General Consulting
• Master Planning

Missouri State Certificate of Authority Numbers:
Survey : 000380
Engineering : 001655
Architecture: 2002014240

Two working days prior to the start of any excavation on this site, contractor shall call Missouri One Call for utility location information.

All OSHA rules & regulations established for the type of work being performed on these plans shall be strictly followed (ie. Trenching, Blasting, etc.)

STATE OF MISSOURI
DAVID P. VAN LEER
NUMBER PE-2012018147
PROFESSIONAL ENGINEER
4/14/17

David P Van Leer, PE
MO# PE-2012018147

SITE IMPROVEMENT PLANS
SCENIC REGIONAL LIBRARY
WRIGHT CITY, MISSOURI

DATE:	REVISION:	DRN. BY:	APP'D. BY:
04-14-17	ISSUED FOR BID	TES	DPV

DRN. BY: TES
APP'D. BY: DPV
DATE: APR. 14, 2017
SCALE: 1" = 20'
PROJ. NO: 16-6414
DWG. NO: C2

SITE PLAN

Drawing name: F:\16-6414 – Scenic Regional Library – Wright City\AutoCAD Drawings\Plan Sheets\Site Plan.dwg Tab: 24X36 Plotted on: Apr 12, 2017 – 1:09pm Plotted by: rphanning

GRADING PLAN

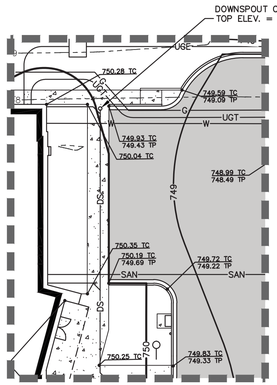

BOOK DROP ALTERNATE
1"=20'

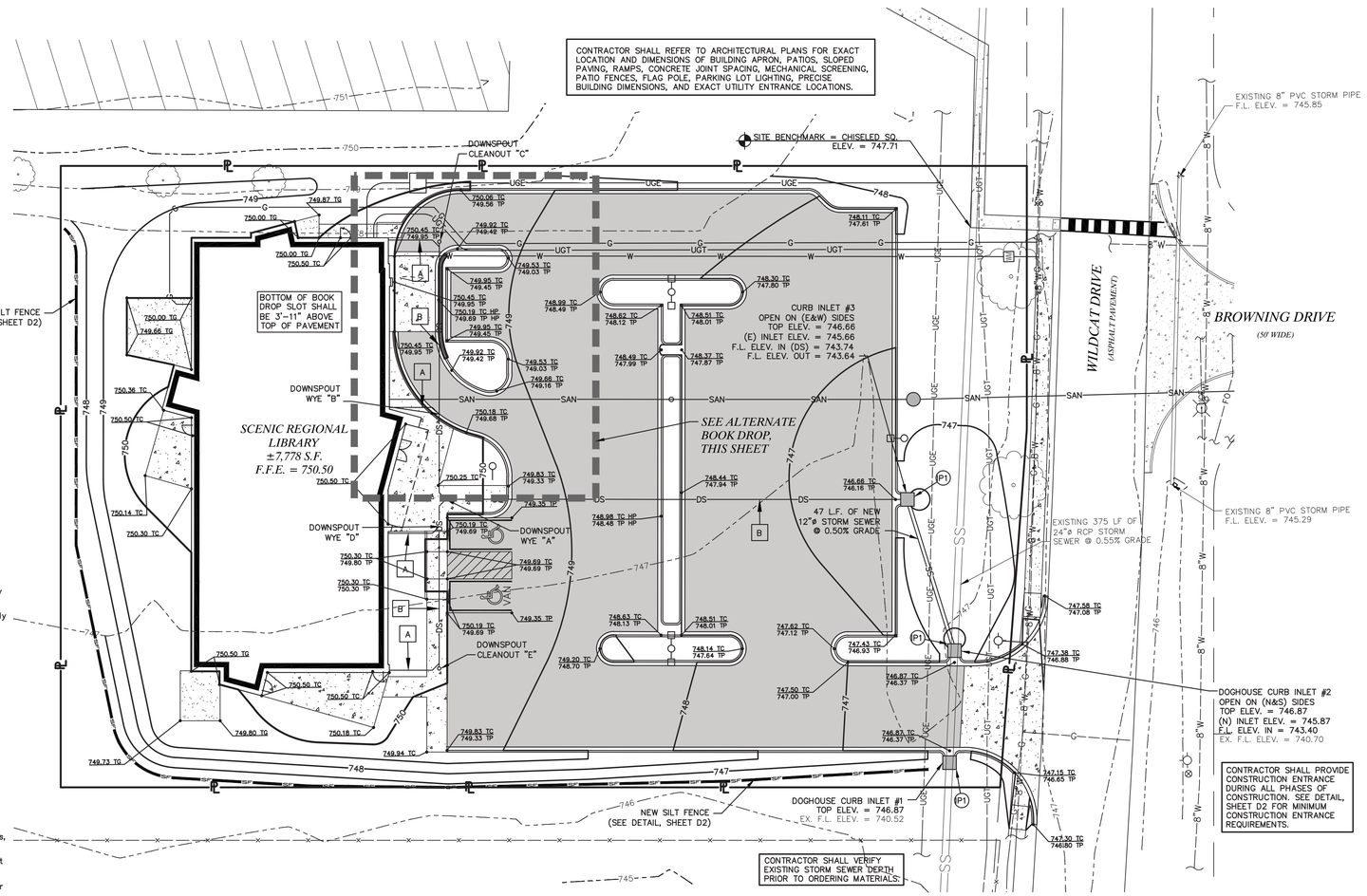

20 0 10 20 40

APRIL, 2017

LEGEND

EXISTING		PROPOSED
500	INDEX CONTOUR	500
	INTERMEDIATE CONTOUR	498
	PROPERTY LINE	
	RIGHT-OF-WAY	
UGE	UNDERGROUND ELECTRIC	UGE
UGT	UNDERGROUND TELEPHONE	UGT
SAN	SANITARY SEWER	SAN
	SANITARY MANHOLE	
SS	STORM SEWER	SS
	STORM INLET	
G	GAS LINE	G
W	WATER LINE	W
	FIRE HYDRANTS	
	WATER VALVE	
WM	WATER METER	WM
	TREE	
	FENCE	
	LIGHT	
	SILTATION CONTROL	SF SF
	CONCRETE PAVEMENT	
	ASPHALT PAVEMENT	
	GRAVEL	

(P1) INLET PROTECTION (SEE DETAIL, SHEET D2)

GRADING & DRAINAGE PLAN NOTES

1. The sitework on this project shall meet or exceed the City of Wright City standards and specifications.
2. North derived from the Plat of Wright City School and Library Plat recorded as Document #2015503654 of the Warren county records.
3. Project Benchmark is top of USGS Disk Stamped WRIGHT and is located 26 feet North of the Centerline of Westwoods Road and 71 feet West of the Centerline of Bell Rd. in Warren County, MO

   Site Benchmark is a chiseled square on the corner of the existing sidewalk. Elevation = 747.71
4. Site is zoned "C-4" General and Highway Business Districts per the City of Wright City Zoning Map.
5. This property is within Zone X "areas determined to be outside of the 0.2% annual chance floodplain", per Flood Insurance Rate Map, Warren County, Missouri and Incorporated Areas, Map Number 29219C0158D, Effective date November 4, 2009.
6. In accordance with generally accepted construction practices, the Contractor will be solely and completely responsible for conditions of the job site, including safety of all persons and property during performance of the work. This requirement will apply continuously and not be limited to normal working hours. Contractor will be responsible for providing and maintaining all barricades, warning signs, flashing lights and traffic control devices during construction. Contractor to comply with all OSHA regulation requirements and safety meeting requirement.
7. Underground structures, facilities and utilities have been plotted from available surveys and records. Therefore, their locations must be considered approximate only. There may be others, the existence of which is presently not known.
8. No investigation has been performed by Cochran regarding hazardous waste, underground conditions or utilities affecting the tract shown hereon.
9. Contractor to contact telephone, electric, gas, water and cable companies to have underground utilities located on this site and adjacent to this site prior to doing any excavating.
10. All unsurfaced areas are to receive 4 inches of topsoil. Contractor to seed, mulch, fertilize, and maintain all areas outside of paved areas that were disturbed during construction until an acceptable stand of grass is established. The Contractor shall be responsible to take whatever means necessary to establish permanent soil stabilization.
11. See Landscaping Plans for landscaping requirements.
12. All grading, drainage, detention, and erosion control shall be in conformance with the City of Wright City Standards.
13. The Contractor is specifically cautioned that the location and/or elevation of existing utilities as shown on these plans is based on records of the various utility companies and, where possible, measurements taken in the field. The information is not to be relied on as being exact or complete. The Contractor must call the appropriate utility company to request exact field location of utilities. It shall be the responsibility of the Contractor to relocate all existing utilities, which conflict with the new improvements shown on plans.
14. All trenches under paved areas shall be backfilled with granular material and compacted to meet compaction requirements for the road/parking lot.
15. All survey monuments disturbed during construction shall be replaced by a licensed land surveyor licensed in the state in which this project is located at the Contractor's expense.
16. Contractor to obtain and follow installation requirements for storm sewer from pipe manufacturer for each type of piping material. Storm sewer pipe shall be reinforced concrete pipe, Class III per ASTM C-76, with plastic bitumen gaskets at joints. Storm sewer pipe installed in green areas may be HDPE pipe, AASHTO M252 Type S and M294 Type S.
17. Contractor shall coordinate adjustments to existing utilities with appropriate utility company as work progresses.
18. Contractor shall coordinate the scheduling and location of the demolition and installation of all utilities, including stakeout, conduit required, trenching required, etc. Contractor shall contact each utility provider with at least 30 days advance notice of any work to be done.
19. Contractor shall provide a minimum of 18" of clearance between sanitary sewer and waterlines and a minimum of 18" of clearance between storm sewers and waterlines. This may mean that lowering of waterlines may be necessary.
20. Contractor shall submit shop drawings for sanitary sewer, water main, and storm sewer structures to Cochran for review and approval prior to fabrication of any structures.
21. Storm and sanitary sewer plan information depicts pipe lengths and grades calculated from the center of all structures.
22. All trenching, pipe laying, and backfilling shall be in accordance with Federal OSHA Regulations.
23. Utility Contractor shall have approval of all governing agencies having jurisdiction over this system prior to installation.
24. All necessary inspections, testing, and/or certifications required by codes, the County, and/or utility service companies shall be performed prior to announced building possession and the final connection of services.
25. Contractor is encouraged to visit the site prior to submitting their bid for this project.
26. Contractor shall maintain the site in a well-drained manner in order to assume the shortest possible drying time after each rainfall. This will mean that pumping of standing water in low areas on the site will most likely be required during construction.
27. Contractor shall saw cut all curb and gutter sections, concrete medians and along pavement where new construction ties into existing areas. Contractor shall maintain traffic flow and provide traffic control throughout construction.
28. All existing structures unless otherwise noted to remain, (i.e. fencing, trees, concrete, asphalt pavement, utilities, etc.) within the construction area shall be removed and disposed off-site in a manner meeting local and state regulations. Any burning on site shall be subject to local and state ordinances and the Owner's Specifications.
29. All cut or fill slopes shall be 3:1 or flatter unless otherwise noted.
30. Existing grade contours shown at 1 foot intervals. New grade contours shown at 1 foot intervals.
31. If any existing structures to remain are damaged during construction it shall be the Contractor's responsibility to repair and/or replace the existing structure as necessary to return it to existing conditions or better.
32. Contractor shall assure positive drainage away from buildings for all green space and paved areas.
33. It shall be the contractor's responsibility to keep all mud and silt on site and off of streets.
34. Land disturbing activities shall not commence until approval to do so has been received by governing agencies and until all erosion control measures have been taken.

DOWNSPOUT SCHEDULE

STRUCTURE INFORMATION

STRUCTURE NUMBER	TOP ELEV.	FL ELEV.
DOWNSPOUT WYE "A"	–	745.62
DOWNSPOUT WYE "B"	–	745.88
DOWNSPOUT CLEANOUT "C"	749.52	746.39
DOWNSPOUT WYE "D"	–	745.71
DOWNSPOUT CLEANOUT "E"	750.10	746.12

DOWNSPOUT LEGEND

A — 6"ø SCH. 40 PVC DOWNSPOUT LATERAL (1.00% MIN. GRADE)

B — 8"ø SDR. 35 PVC DOWNSPOUT COLLECTOR (1.00% MIN. GRADE)

GEOTECHNICAL REQUIREMENTS

Soil Preparation and Compaction:

Remove all stumps, bushes, trees, weeds, roots and other surface obstructions from the site. Contractor to strip all topsoil from the entire area to be graded. After the removal of all foreign organic matter, and after stripping of topsoil, the entire surface to be filled, or areas that are cut to subgrade shall be scarified to a minimum depth of 12 inches and then compacted by proof rolling with suitable compaction equipment weighing not less than 400 psi based on the contact area of one row of feet, or pneumatic-tired roller of equivalent compaction characteristics.

The maximum thickness of fill shall be in lifts not to exceed 8 inches. The proof rolling and the fill compaction operations under the building and paved areas shall produce at least 95% of the Standard Proctor Maximum Dry Density Test (ASTM D-698). Any soft areas encountered during proof rolling shall be undercut and replaced with a properly compacted fill. The compaction of the fill shall be tested during placement by a qualified soil technician to determine if the proper densification is taking place. All fill used on the site should consist of low plasticity soils as approved by the soils engineer. After proof rolling, no water should be allowed to pond on the surface. The earthwork for all building foundations and slabs shall be in accordance with architectural building plans and specifications. Compaction equipment shall be operating of the site at all times during filling operations.

Rock Preparation and Compaction:

Prior to fill placement, vegetation should be stripped and sloped areas should be benched. The fill materials placed at the site will consist primarily of a rock/soil mixture and blasted rock generated from the site. The shot rock fill materials should be well graded with particle sizes ranging from sand and silt to boulders less that 18 inches in diameter. Boulders larger than 18 inches should be separated and broken using a track hoe with a breaker or by other means or the boulders should be placed in non-critical fill areas, as approved by a soil technician. We recommend that boulders larger than 18 inches not be placed in areas where they will be encountered when excavating to install utilities or construct basements, or within 2 or 3 feet of the street subgrade level. Where the larger boulders are placed, care should be taken to ensure that voids are not present around them. It may be necessary to place gravel to in fill or "choke off" voids around the larger boulders.

Ripped rock and shot rock should be placed in horizontal lifts not exceeding 18 inches in loose thickness and compacted by a minimum of five passes of a vibratory roller weighing at least 10 tons. Proper compaction may not be achieved without vibratory roller. Due to the varying graduation of fill materials, density tests will generally be considered inappropriate to determine the quality of the fill. Therefore, performance criteria will be used to evaluate the fill. This involves observing the placement of each lift of fill and the effects of the compaction equipment prior to placing additional fill.

1. The soils at the site are susceptible to disturbance during grading operations (i.e, pumping and/or rutting). Care must be exercised to maintain the integrity of the subgrade when preparing the site for the placement of fill, making excavations, and other earth-related construction activities. If sensitive soils are present, a special approach to grading may need to be adopted. The special approach to grading includes excavating with a trackhoe or wide-tracked excavator. Care should be exercised to maintain the integrity of the subgrade prior to the placement of fill and building construction.
2. Medium to high plastic soils were encountered in the six borings at depths that will affect the proposed construction. Therefore, remediation of the expansive clay soils to a minimum depth of 5 feet below the finished floor elevation is required within the proposed building footprint. Only approved fill material will be allowed within the proposed building footprint.
3. All vegetation/organic materials must be stripped where encountered. The organic material can be stockpiled on-site for later use in landscaped areas or disposed of off-site in a legal manner. In all areas, the resulting exposed subgrade should be proofrolled, and any soft soil or yielding areas should be over excavated and backfilled with new compacted fill or well-graded crushed rock.
4. Where the bearing and/or subgrade soils consist of expansive clay soils, they shall be removed to a minimum depth of 5 feet below the finished floor elevation. The overexcavation should extend at least 5 feet beyond the outside edge of the building footprint to facilitate uniform compaction of the replacement materials and may require additional widening at the corners to allow equipment access for proper compaction. The overexcavation should be backfilled with properly compacted low plastic soil or 1-inch minus crushed limestone or limestone screenings. The foundations and floor slabs would then be constructed on the newly placed fill.
5. Fill Materials. Prior to placement of the fill, the fill material is to be approved by a representative of the Owner. In general, fill materials should consist of low plasticity, (liquid limit less than 45 percent and a plasticity index less than 20) cohesive soils or granular materials. Acceptable non_organic fill soils include materials designated CL, ML, CL_ML, SP, SW, and GW by ASTM D 2487. Open-graded 'clean' granular materials, in general, should not be used, as they tend to hold water, resulting in softening of the underlying cohesive soil subgrade.
6. Compaction. Fill or backfill must be placed in lifts of uniform thickness and compacted. The fill should be placed in 8-inch loose lifts. The engineered fill should be compacted to at least 95 percent of its standard Proctor (ASTM 698) maximum dry density and be placed at a moisture content that is plus or minus 2 percent of optimum moisture content. The soil fill may require aeration or wetting at the time of construction to achieve proper compaction. Deleterious material should not be included in fill, nor should the fill be placed on soft or frozen materials.
7. Observation of the type of soil or granular material to be placed as fill, placement of the compacted fill and field density testing should be performed by a qualified technician on each lift to verify the compaction requirements are met in the field and to insure that high plastic or highly compressible soils are not in the fill within the building pad area.
8. Site Drainage and Grading. During construction, proper drainage should be provided to protect the foundation excavations, floor slab and pavement subgrades from the detrimental effects of weather conditions during construction. Finished subgrades and foundation excavations should be kept free of standing water at all times.
9. Positive site drainage should be provided to reduce surface water infiltration around the perimeter of the building and beneath the floor slab. Grades must be sloped away from the structures and roof and surface drainage collected and discharged in such a way that water is not permitted to infiltrate the foundation backfill. Drain and utility pipes beneath the floor should have tight joints to prevent leakage. Utility trenches beneath the floor slab and pavement areas should be carefully backfilled with compacted low plastic soil or minus gradation crushed rock. "Clean" rock should not be a possible pathway for moisture to the potentially expansive high plastic clay.
10. Proofroll pavement subgrade in both cut and fill areas and recompact the subgrade immediately prior to placing base rock for the pavement. Soft areas should be selectively undercut and backfilled with properly compacted cohesive soil of the same type present in the subgrade. Proofroll passes should be limited, particularly on silty subgrades to reduce the potential for pumping of moisture from deeper within the soil profile. The asphaltic concrete surface course should be checked during placement to verify density and total thickness.

EROSION CONTROL NOTES:

1. Contractor shall assure positive drainage from buildings for all natural & paved areas.
2. All unsurfaced areas are to receive four inches of topsoil. Contractor to seed, mulch, and fertilize all areas outside of paved areas that were disturbed during construction until an acceptable stand of grass is established.
3. Underground facilities, structures, and utilities have been plotted from available surveys and records. Therefore, their locations must be considered approximately only. There may be others, the existence of which is presently not known.
4. No land clearing or grading shall begin until all erosion control measures have been installed.
5. Should construction stop for longer than 15 days, the site shall be seeded as specified by temporary seeding mix.
6. Maintain erosion control measures after each rain and at least once a week.
7. This plan shall not be considered all inclusive as the contractor shall take all necessary precautions to prevent soil sediment from leaving the site.
8. Contractor shall comply with all state and local ordinances that apply.
9. Additional erosion and sediment control measures will be installed if deemed necessary by on site inspection.
10. Land disturbing activities shall not commence until approval to do so has been received by governing authorities.
11. If installation of storm drainage system should be interrupted by weather or nightfall, the pipe ends shall be covered with filter fabric.
12. Contractor shall be responsible to take whatever means necessary to establish permanent soil stabilization.
13. Contractor shall adjust and/or cut existing pavement as necessary to assure a smooth fit and continuous grade.
14. The contractor is responsible for keeping stormwater run-off and siltation under control during construction.
15. Pavement lifts shall be placed in traverse directions with final layer perpendicular to the finished contours on parking lot.
16. Contractor to obtain and follow installation requirements for storm sewer, sanitary sewer waterline from pipe manufacturer for each type of piping material.
17. Contractor shall coordinate adjustments to existing utilities with appropriate utility company as work progresses.
18. Contractor shall coordinate the scheduling and location of the demolition and installation of all utilities, including stakeout, conduit required, trenching required, etc. Contractor shall contact each utility provider with at least 30 days advance notice of any work to be done.
19. Site grading shall not proceed until erosion control measures have been taken.
20. In areas where french drain & storm sewer share the same trench, backfill shall be clean to allow for proper drainage.
21. Contractor shall maintain the site in a well-drained manner in order to assume the shortest possible drying time after each rainfall. This will mean that pumping of standing water in low areas on the site will most likely be regd. during construction.
22. Contractor shall saw cut all curb and gutter sections, concrete medians and along pavement where new construction ties into existing areas. Contractor shall maintain traffic flow and provide traffic control throughout construction.
23. It shall be the contractor's responsibility to keep mud and silt on site off of streets.
24. All cut or fill slopes shall be 3:1 or flatter unless otherwise noted.
25. All storm pipe entering structures shall be grouted to assure connection at structure is watertight.

SITE IMPROVEMENTS HAVE INCREASED THE IMPERVIOUS AREA BY 0.40 ACRES. THIS CREATES A 1.4 CFS INCREASE FOR THE 15 YEAR, 20 MINUTE STORM EVENT. STORMWATER WILL FLOW INTO THE EXISTING WRIGHT CITY SCHOOL DISTRICT DETENTION BASIN SOUTH OF THE PROPERTY. SITE IMPROVEMENTS WILL RAISE THE 100 YEAR 20 MINUTE HIGH WATER LEVEL IN THE DETENTION BASIN BY ±0.04'.

636-584-0540 (fax)
636-584-0512 (tel)
mail@cochraneng.com
530A E. Independence Dr.
Union, Missouri 63084
COCHRAN
• Civil Engineering
• Land Surveying
• Architecture
• Site Development
• General Consulting
• Master Planning

Missouri State Certificate of Authority Numbers:
Survey : 000380
Engineering : 001655
Architecture: 2002014240

Two working days prior to the start of any excavation on this site, contractor shall contact Missouri One Call for utility location information.

All OSHA rules & regulations established for the type of construction covered by these plans shall be strictly followed (ie. Trenching, Blasting, etc.)

STATE OF MISSOURI — DAVID P. VAN LEER — NUMBER PE-2012018147 — 4/14/17 — PROFESSIONAL ENGINEER

David P Van Leer, PE
MO# PE-2012018147

SITE IMPROVEMENT PLANS SCENIC REGIONAL LIBRARY WRIGHT CITY, MISSOURI

DATE:	REVISION:	DRN. BY:	APP'D. BY:
4-14-17	ISSUED FOR BID	TES	DPV

DRN. BY: TES
APP'D. BY: DPV
DATE: APR. 14, 2017
SCALE: 1" = 20'
PROJ. NO: 16-6414
DWG. NO: C3

GRADING PLAN

Drawing name: F:\16-6414 - Scenic Regional Library - Wright City\AutoCAD Drawings\Plan Sheets\Grading Plan.dwg Tab: 24X36 Plotted on: Apr 13, 2017 - 3:00pm Plotted by: tschowe

UTILITY PLAN

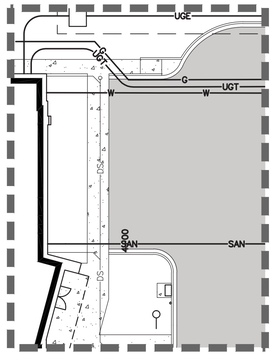

BOOK DROP ALTERNATE
1"=20'

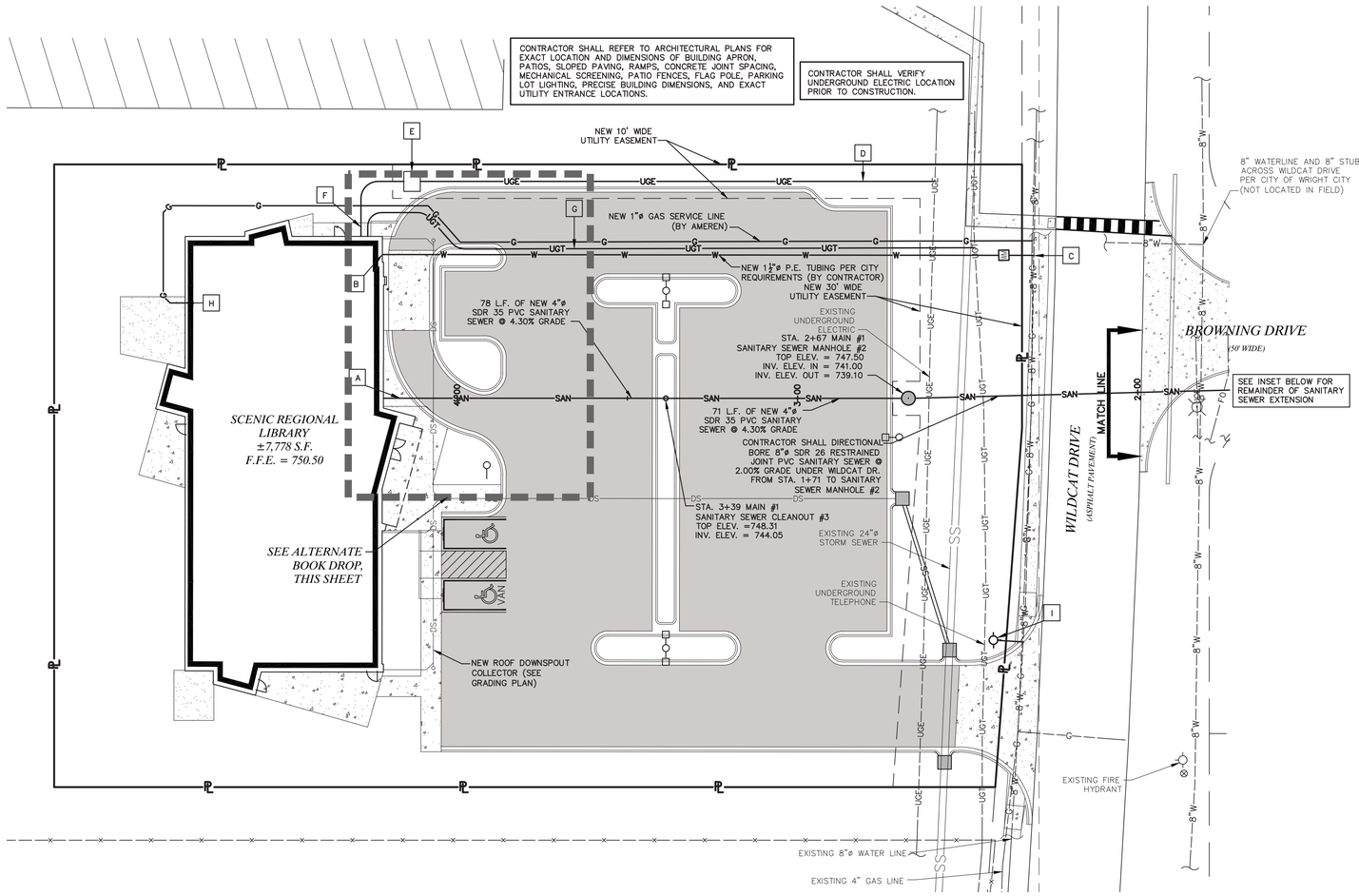

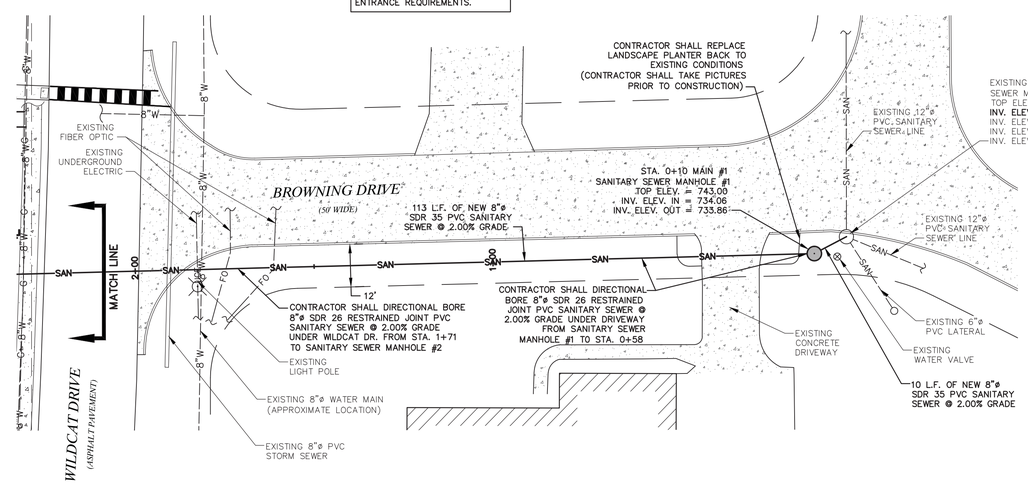

UTILITY PLAN NOTES

1. The sitework on this project shall meet or exceed the City of Wright City standards and specifications.
2. North derived from the Plat of Wright City School and Library Plat recorded as Document #201503654 of the Warren county records.
3. Project Benchmark is top of USGS Disk Stamped WRIGHT and is located 26 feet North of the Centerline of Westwoods Road and 71 feet West of the Centerline of Bell Rd. in Warren County, MO

   Site Benchmark is a chiseled square on the corner of the existing sidewalk. Elevation = 747.71
4. Site is zoned "C-4" General and Highway Business Districts per the City of Wright City Zoning Map.
5. This property is within Zone X "areas determined to be outside of the 0.2% annual chance floodplain", per Flood Insurance Rate Map, Warren County, Missouri and Incorporated Areas, Map Number 29219C0158D, Effective date November 4, 2009.
6. In accordance with generally accepted construction practices, the Contractor will be solely and completely responsible for conditions of the job site, including safety of all persons and property during performance of the work. This requirement will apply continuously and not be limited to normal working hours. Contractor will be responsible for providing and maintaining all barricades, warning signs, flashing lights and traffic control devices during construction. Contractor to comply with all OSHA regulation requirements and safety meeting requirement.
7. Underground structures, facilities and utilities have been plotted from available surveys and records. Therefore, their locations must be considered approximate only. There may be others, the existence of which is presently not known.
8. No investigation has been performed by Cochran regarding hazardous waste, underground conditions or utilities affecting the tract shown hereon.
9. Contractor to contact telephone, electric, gas, water and cable companies to have underground utilities located on this site and adjacent to this site prior to doing any excavating.
10. The Contractor is specifically cautioned that the location and/or elevation of existing utilities as shown on these plans is based on records of the various utility companies and, where possible, measurements taken in the field. The information is not to be relied on as being exact or complete. The Contractor must call the appropriate utility company to request exact field location of utilities. It shall be the responsibility of the Contractor to relocate all existing utilities, which conflict with the new improvements shown on plans.
11. All trenches under paved areas shall be backfilled with granular material and compacted to meet compaction requirements for the road/parking lot.
12. All survey monuments disturbed during construction shall be replaced by a licensed land surveyor licensed in the state in which this project is located at the Contractor's expense.
13. Contractor shall coordinate adjustments to existing utilities with appropriate utility company as work progresses.
14. Contractor shall coordinate the scheduling and location of the demolition and installation of all utilities, including stakeout, conduit required, trenching required, etc. Contractor shall contact each utility provider with at least 30 days advance notice of any work to be done.
15. Contractor shall provide a minimum of 18" of clearance between sanitary sewer and waterlines and a minimum of 18" of clearance between storm sewers and waterlines. This may mean that lowering of waterlines may be necessary.
16. Contractor shall submit shop drawings for sanitary sewer, water main, and storm sewer structures to Cochran for review and approval prior to fabrication of any structures.
17. Storm and sanitary sewer plan information depicts pipe lengths and grades calculated from the center of all structures.
18. All trenching, pipe laying, and backfilling shall be in accordance with Federal OSHA Regulations.
19. Utility Contractor shall have approval of all governing agencies having jurisdiction over this system prior to installation.
20. All necessary inspections, testing, and/or certifications required by codes, the County, and/or utility service companies shall be performed prior to announced building possession and the final connection of services.
21. Contractor is encouraged to visit the site prior to submitting their bid for this project.
22. Contractor shall saw cut all curb and gutter sections, concrete medians and along pavement where required for utility trenching. Contractor shall maintain traffic flow and provide traffic control throughout construction.
23. All existing structures unless otherwise noted to remain, (i.e. fencing, trees, concrete, asphalt pavement, utilities, etc.) within the construction area shall be removed and disposed off-site in a manner meeting local and state regulations. Any burning on site shall be subject to local and state ordinances and the Owner's Specifications.
24. If any existing structures to remain are damaged during construction it shall be the Contractor's responsibility to repair and/or replace the existing structure as necessary to return it to existing conditions or better.
25. It shall be the contractor's responsibility to keep all mud and silt on site and off of streets.

20 0 10 20 40

APRIL, 2017

LEGEND

EXISTING		PROPOSED
PL	PROPERTY LINE	
R/W	RIGHT-OF-WAY	
UGE	UNDERGROUND ELECTRIC	UGE
UGT	UNDERGROUND TELEPHONE	UGT
SAN	SANITARY SEWER	SAN
	SANITARY MANHOLE	
SS	STORM SEWER	SS
	STORM INLET	
G	GAS	G
X"W	WATER LINE (SIZE)	W
	FIRE HYDRANTS	
	WATER VALVE	
WM	WATER METER	WM
	LIGHT	
	CONCRETE PAVEMENT	
	ASPHALT PAVEMENT	
	GRAVEL	

UTILITY LEGEND

- **A** 4"ø SANITARY SEWER LATERAL 5' OUTSIDE OF BUILDING. COORDINATE WITH ARCHITECTURAL PLANS. INV. ELEV. = 747.40
- **B** 1½"ø DOMESTIC WATER LINE ENTRY. CONTRACTOR SHALL BE RESPONSIBLE FOR INSTALLING ANY APPURTENANCES ON THE DOMESTIC LINE SUCH AS BACKFLOW PREVENTION DEVICES, ETC., WHICH MAY BE REQUIRED. CONTRACTOR TO COORDINATE WITH CITY.
- **C** CONNECT TO EXISTING 8"ø WATER MAIN WITH 1½"ø SERVICE TAP AND 1½" METER PER CITY REQUIREMENTS. (CONTRACTOR SHALL VERIFY SIZE, LOCATION, AND MATERIAL, OF EXISTING MAIN PRIOR TO ORDERING MATERIALS)
- **D** CONTRACTOR SHALL TRENCH AND BACKFILL (2) 3"ø GRAY SCH. 40 PVC CONDUIT WITH 1½" PULL TAPE WITH EMBEDDED TRACE WIRE FROM EXISTING UNDERGROUND ELECTRIC TO NEW PAD MOUNTED TRANSFORMER. CUIVRE RIVER WILL PROVIDE AND PULL WIRES.
- **E** PAD MOUNTED TRANSFORMER PROVIDED AND SET BY CUIVRE RIVER. CUIVRE RIVER WILL MAKE ALL PRIMARY AND SECONDARY CONNECTIONS.
- **F** CONTRACTOR SHALL TRENCH 4"ø CONDUIT AND PROVIDE WIRES FROM NEW PAD MOUNTED TRANSFORMER TO METER. (SEE MEP PLAN)
- **G** CONTRACTOR SHALL PROVIDE (2) 3"ø CONDUIT FROM EXISTING LINE TO BUILDING. (CONTRACTOR SHALL COORDINATE WITH CHARTER FOR CONNECTION TO EXISTING LINE)
- **H** 1"ø GAS SERVICE ENTRY. GAS METER PER AMEREN REQUIREMENTS. (CONTRACTOR SHALL INSTALL ALL GAS LINES ON BUILDING SIDE OF GAS METER AND CONNECT TO METER.)
- **I** NEW FIRE HYDRANT. CONNECT TO EXISTING 8"ø WATER MAIN WITH NEW 8"x8"x6" STAINLESS STEEL TAPPING SLEEVE WITH FLANGED OUTLET, 6"ø FLANGED x M.J. TAPPING VALVE AND FIRE HYDRANT ASSEMBLY (SEE DETAIL, SHEET D2)

COCHRAN
530A E. Independence Dr.
Union, Missouri 63084
636-584-0540 (tel.)
636-584-0512 (fax)
mail@cochraneng.com
• Civil Engineering
• Land Surveying
• Architecture
• Site Development
• General Consulting
• Master Planning

Missouri State Certificate of Authority Numbers:
Survey : 000380
Engineering : 001655
Architecture: 2002014240

Two working days prior to the start of any excavation on this site, contractor shall call "Missouri One Call" for utility location information.

All OSHA rules & regulations established for the type of construction covered by these plans shall be strictly followed (ie. Trenching, Blasting, etc.)

STATE OF MISSOURI
DAVID P. VAN LEER
NUMBER PE-2012018147
PROFESSIONAL ENGINEER
4/14/17

David P Van Leer, PE
MO# PE-2012018147

SITE IMPROVEMENT PLANS
SCENIC REGIONAL LIBRARY
WRIGHT CITY, MISSOURI

DATE:	REVISION:	DRN. BY:	APPD. BY:
04-14-17	ISSUED FOR BID	TES	DPV

DRN. BY: TES
APPD. BY: DPV
DATE: APRIL 14, 2017
SCALE: 1" = 20'
PROJ. NO.: 16-6414
DWG. NO.: C4

UTILITY PLAN

Drawing name: F:\16-6414 - Scenic Regional Library - Wright City\AutoCAD Drawings\Plan Sheets\Utility Plan.dwg Tab: 24X36 Plotted on: Apr 14, 2017 - 9:31am Plotted by: rjohanning

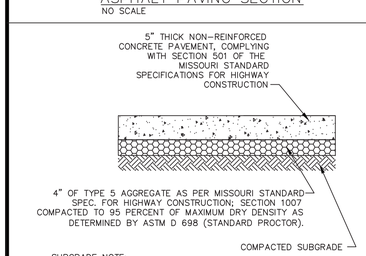

SUBGRADE NOTE:
THE SUBGRADE SHALL BE COMPACTED TO A DRY DENSITY OF AT LEAST 95 PERCENT OF THE MATERIAL'S MAXIMUM DRY DENSITY AS DETERMINED BY THE STANDARD PROCTOR TEST (ASTM D 698).

STANDARD DUTY ASPHALT PAVING SECTION
NO SCALE

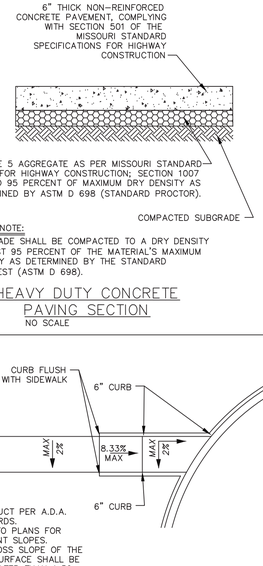

SUBGRADE NOTE:
THE SUBGRADE SHALL BE COMPACTED TO A DRY DENSITY OF AT LEAST 95 PERCENT OF THE MATERIAL'S MAXIMUM DRY DENSITY AS DETERMINED BY THE STANDARD PROCTOR TEST (ASTM D 698).

HEAVY DUTY CONCRETE PAVING SECTION
NO SCALE

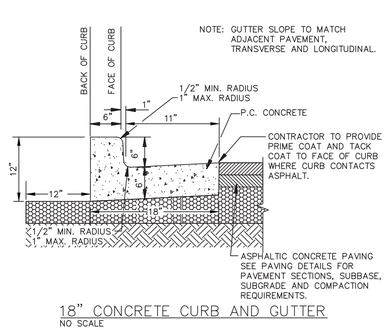

18" CONCRETE CURB AND GUTTER
NO SCALE

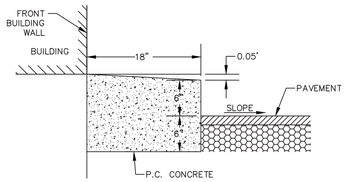

18" CONCRETE CURB
NO SCALE

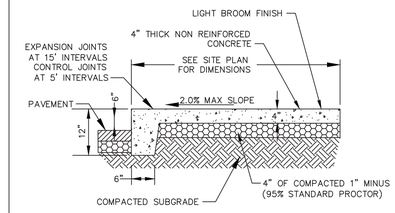

CONCRETE SIDEWALK W/ INTEGRAL CURB DETAIL
NO SCALE

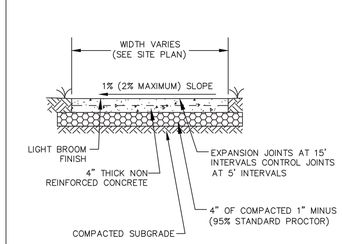

CONCRETE SIDEWALK
NO SCALE

SUBGRADE NOTE:
THE SUBGRADE SHALL BE COMPACTED TO A DRY DENSITY OF AT LEAST 95 PERCENT OF THE MATERIAL'S MAXIMUM DRY DENSITY AS DETERMINED BY THE STANDARD PROCTOR TEST (ASTM D 698).

STANDARD DUTY CONCRETE PAVING SECTION
NO SCALE

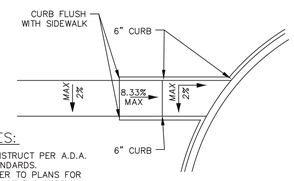

NOTES:
1. CONSTRUCT PER A.D.A. STANDARDS.
2. REFER TO PLANS FOR ADJACENT SLOPES.
3. THE CROSS SLOPE OF THE RAMP SURFACE SHALL BE NO GREATER THAN 1:50.

ADA RAMP "A"
NO SCALE

NOTES:
1. CONSTRUCT PER A.D.A. STANDARDS.
2. REFER TO PLANS FOR ADJACENT SLOPES.
3. THE CROSS SLOPE OF THE RAMP SURFACE SHALL BE NO GREATER THAN 1:50.

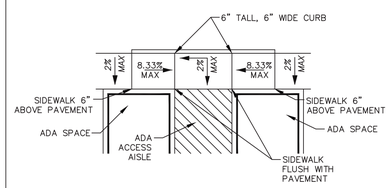

ADA RAMP "B"
NO SCALE

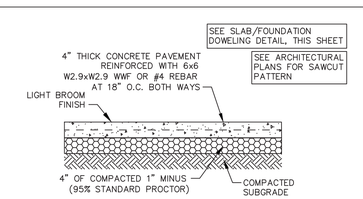

GENERAL CONCRETE SLAB
NO SCALE

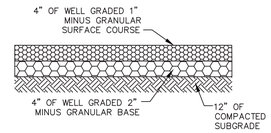

COMPACTED GRAVEL MECHANICAL AREA
NO SCALE

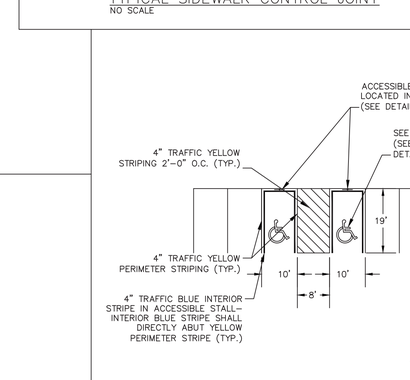

TYPICAL SIDEWALK CONTROL JOINT
NO SCALE

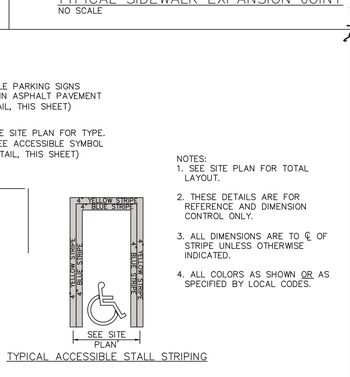

TYPICAL SIDEWALK EXPANSION JOINT
NO SCALE

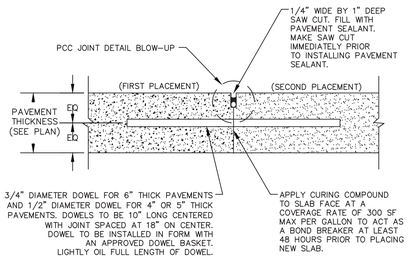

CONSTRUCTION JOINT
NO SCALE

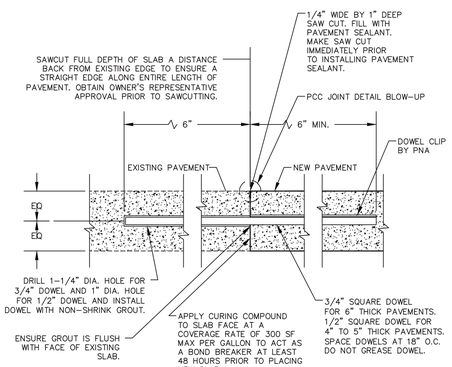

CONSTRUCTION JOINT TO EXISTING PAVEMENT
NO SCALE

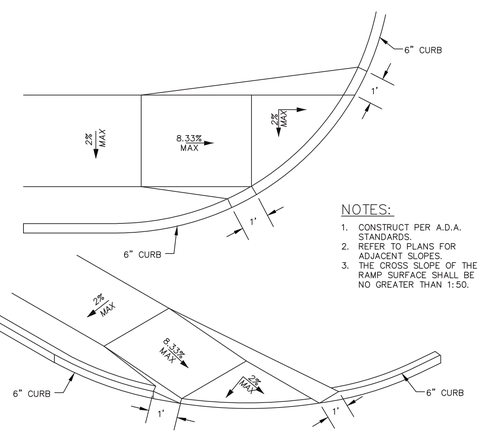

NOTES:
1. CONSTRUCT PER A.D.A. STANDARDS.
2. REFER TO PLANS FOR ADJACENT SLOPES.
3. THE CROSS SLOPE OF THE RAMP SURFACE SHALL BE NO GREATER THAN 1:50.

ADA RAMP "C"
NO SCALE

NOTES:
1. SEE SITE PLAN FOR TOTAL LAYOUT.
2. THESE DETAILS ARE FOR REFERENCE AND DIMENSION CONTROL ONLY.
3. ALL DIMENSIONS ARE TO ℄ OF STRIPE UNLESS OTHERWISE INDICATED.
4. ALL COLORS AS SHOWN OR AS SPECIFIED BY LOCAL CODES.

TYPICAL ACCESSIBLE STALL STRIPING

ACCESSIBLE PARKING STRIPING
NO SCALE

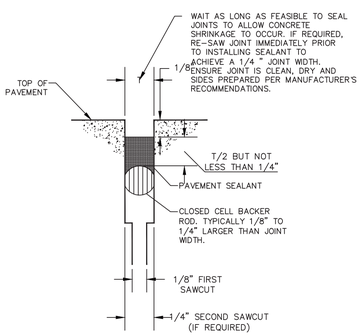

NOTES:
1. ENSURE JOINTS ARE CLEAN AND DRY PRIOR TO THE APPLICATION OF THE JOINT SEALANT.
2. INSTALL CLOSED CELL BACKER ROD AFTER JOINTS HAVE BEEN CLEANED AND DRIED IN ACCORDANCE WITH SEALANT MANUFACTURER'S REQUIREMENTS.
3. INSTALL BACKER TOD AT CONSISTENT AND UNIFORM DEPTH.
4. JOINT SEALANT APPLICATION SHALL BE IN STRICT COMPLIANCE WITH SEALANT MANUFACTURER'S REQUIREMENTS.

PCC JOINT DETAIL BLOW-UP (TYP.)

CONCRETE JOINT DETAILS
NO SCALE

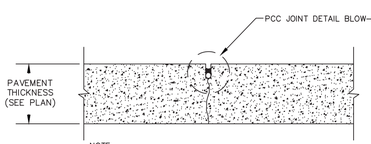

NOTE:
1. SEE PLAN FOR JOINT SPACING.

CONTRACTION JOINT
NO SCALE

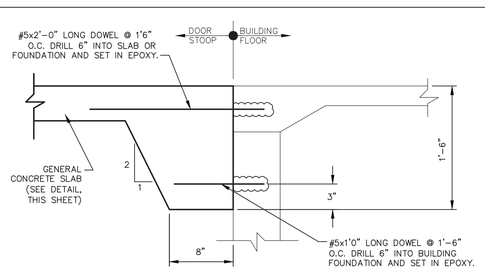

SLAB/FOUNDATION DOWELING DETAIL
NO SCALE

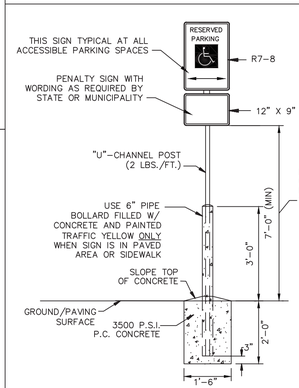

ACCESSIBLE PARKING SIGN DETAIL
NO SCALE

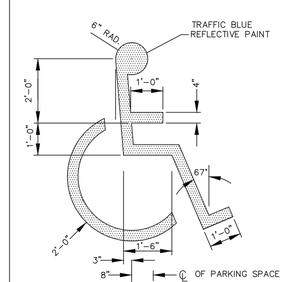

ACCESSIBLE SYMBOL
NO SCALE

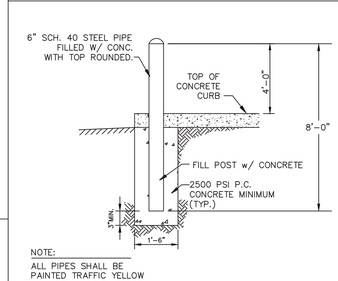

NOTE:
ALL PIPES SHALL BE PAINTED TRAFFIC YELLOW

PIPE BOLLARD
NO SCALE

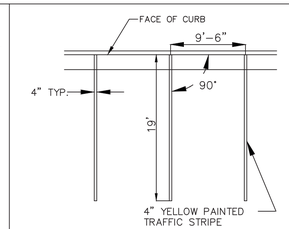

STRIPING DETAIL
NO SCALE

NOTES:
1. ARROWS SHALL BE APPLIED IN ACCORDANCE WITH SECTION 3B.20 OF THE MANUAL ON UNIFORM TRAFFIC CONTROL DEVICES FOR STREETS AND HIGHWAYS.
2. THESE ARROWS ARE TO BE PAINTED RETROREFLECTIVE WHITE.

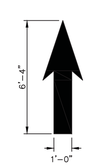

USED IN THE PARKING LOT AISLES

OPEN ARROW MARKINGS
NO SCALE

OCHRAN
530A E. Independence Dr.
Union, Missouri 63084
636-584-0540 (tel.)
636-584-0512 (fax)
mail@ochranengineering.com
• Civil Engineering
• Land Surveying
• Architecture
• Site Development
• General Consulting
• Master Planning

Missouri State Certificate of Authority Numbers:
Survey : 000380
Engineering : 001655
Architecture: 2002014240

Two working days prior to the start of any excavation on this site, contractor shall call Missouri One Call for utility location information.

All OSHA rules & regulations established for the type of construction covered by these plans shall be strictly followed (ie. Trenching, Blasting, etc.)

STATE OF MISSOURI
DAVID P. VAN LEER
NUMBER PE-2012018147
PROFESSIONAL ENGINEER
4/14/17

David P Van Leer, PE
MO# PE-2012018147

SITE IMPROVEMENT PLANS
SCENIC REGIONAL LIBRARY
WRIGHT CITY, MISSOURI

DATE:	REVISION:	DRN. BY:	APPD. BY:
04-14-17	ISSUED FOR BID	TES	DVP

DRN. BY: TES — APPD. BY: DPV
DATE: APR. 14, 2017
SCALE: NO SCALE
PROJ. NO.: 16-6414
DWG. NO.: D1

DETAIL SHEET

Drawing name: F:\16-6414 - Scenic Regional Library - Wright City\AutoCAD Drawings\Plan Sheets\DETAIL SHEET.dwg Tab: D1 Plotted on: Apr 14, 2017 - 2:13pm Plotted by: tschowe

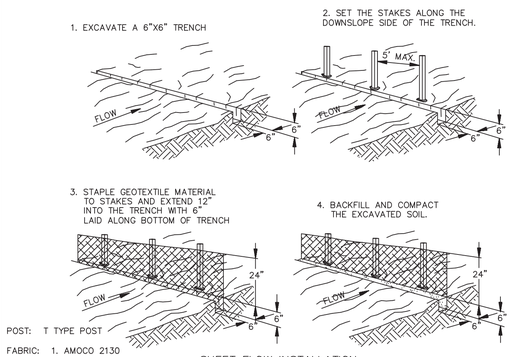

SHEET FLOW INSTALLATION
(PERSPECTIVE VIEW)

NOTE: INSTALL IN ACCORDANCE WITH SILT FENCE DETAIL, EXCEPT AS NOTED ABOVE.

SEDIMENTATION/SILT FENCE WITHOUT WIRE SUPPORT
NO SCALE

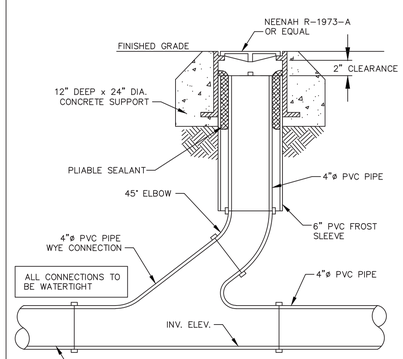

SANITARY SEWER CLEANOUT DETAIL
NO SCALE

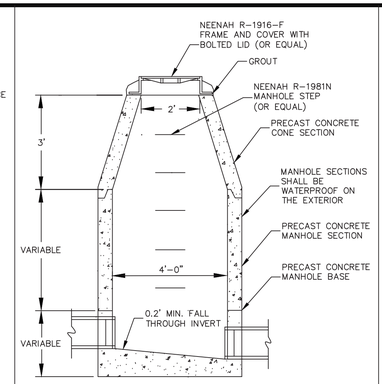

SANITARY SEWER MANHOLE DETAIL
NO SCALE

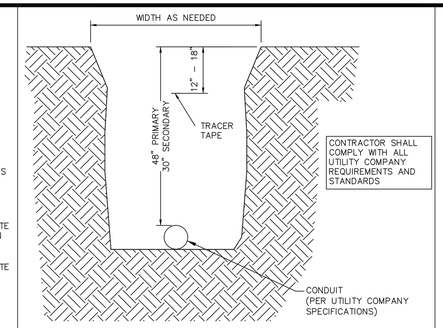

1. BACKFILL MATERIAL FOR UNDERGROUND ELECTRIC SHALL BE SUITABLE EARTH, FREE FROM LARGE ROCKS OR STONES.

2. ALL TRENCHES IN AREAS OF UNSUITABLE EARTH USED FOR UNDERGROUND ELECTRIC SHALL HAVE A BEDDING OF WELL-GRADED, 1" MINUS, GRANULAR BACKFILL FROM 4" BELOW THE BOTTOM OF THE PIPE TO ONE-HALF THE DIAMETER OF THE PIPE COMPACTED TO 95% OF THE STANDARD PROCTOR DENSITY. (ASTM D-698)

3. IN AREAS OF CLEAN DIRT CUTS OUTSIDE OF PAVED AREAS, TRENCH MAY BE BACKFILLED WITH SAME MATERIAL AND COMPACTED TO 95% OF THE STANDARD PROCTOR DENSITY. (ASTM D-698)

4. IN AREAS OF ROCK CUT, THE TRENCH SHALL BE BACKFILLED WITH WELL-GRADED GRANULAR COMPACTED MATERIAL TO SIX INCHES ABOVE TOP OF PIPE.

5. CONTRACTOR SHALL BE RESPONSIBLE FOR TRENCH SETTLEMENT.

6. IN PAVED (OR GRAVEL) AREAS WELL-GRADED 1" MINUS GRANULAR BACKFILL COMPACTED TO 95% OF STANDARD PROCTOR DENSITY (ASTM-698) SHALL BE USED.

7. TRACER TAPE SHALL BE 3" WIDE, BONDED LAYER PLASTIC WITH MAGNETIC FOIL CORE, TERRA TAPE DETECTABLE, MANUFACTURED BY GRIFFOLYN CO. OF HOUSTON, TEXAS, AND SHALL HAVE THE WORDS "CAUTION: "ELECTRICAL CONDUIT BURIED BELOW"

UNDERGROUND ELECTRIC TRENCHING DETAIL
NO SCALE

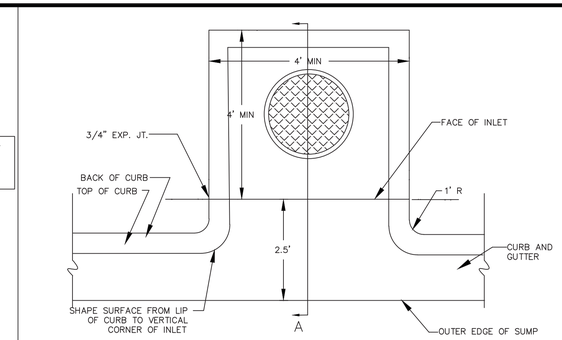

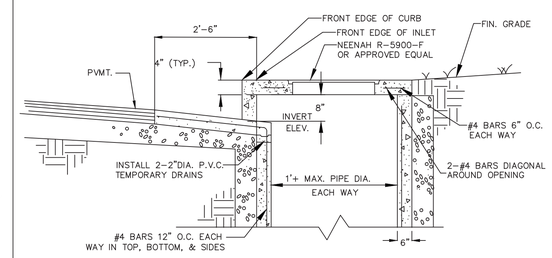

SECTION A-A SQUARE

CURB INLET
NO SCALE

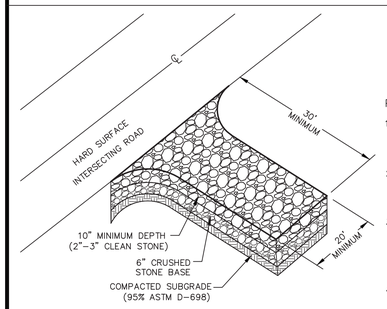

PLAN
NOTE TO GC: THE GOAL OF A CONSTRUCTION EXIT IS TO ELIMINATE TRACK OUT. SIMPLY MANAGING TRACK OUT THROUGH DESIGNATED OR CONTINUAL STREET SWEEPING IS NOT AN ACCEPTABLE PRACTICE. WHILE STREET SWEEPING IS AN ACCEPTABLE PRACTICE FOR REMOVING DUST AND MINIMAL AMOUNTS OF FINE SEDIMENT, OBSERVABLE TRACK OUT FROM THE PROJECT SHOULD TRIGGER THE USE OF ADDITIONAL MEASURES (WHEEL WASH), CONSIDERATION OF ALTERNATE EXITS, OR DISCONTINUING VEHICLE TRAFFIC UNTIL CONDITIONS ON-SITE HAVE IMPROVED. TRACK OUT IS A SEDIMENT RELEASE.

CONSTRUCTION EXIT
NO SCALE

PERFORMANCE STANDARDS:

1. ALL SITE ACCESS MUST BE CONFINED TO THE CONSTRUCTION EXIT(S). BARRICADE TO PREVENT USE OF ANY LOCATIONS OTHER THAN THE CONSTRUCTION EXIT(S) WHERE VEHICLES OR EQUIPMENT MAY ACCESS THE SITE.
2. CONTRACTOR TO LOCATE TEMPORARY CONSTRUCTION FENCING, JERSEY BARRIERS, OR BOTH ALONG THE SIDES OF THE CONSTRUCTION EXIT TO PREVENT CONSTRUCTION TRAFFIC FROM SHORT CIRCUITING/BYPASSING THE EXIT.
3. IF THE ACTION OF VEHICLES TRAVELING OVER THE GRAVEL CONSTRUCTION EXIT(S) IS NOT SUFFICIENT TO PREVENT TRACKING OF DIRT, DUST OR MUD, THEN TIRES MUST BE WASHED BEFORE THE VEHICLES ENTER A PUBLIC ROAD. ALL WASH WATER MUST BE ROUTED TO A SEDIMENT TRAP OR OTHER TREATMENT AREA AND SHALL NOT BE DIRECTLY DISCHARGED OFF-SITE.
4. LOCATIONS WHERE VEHICLES ENTER AND EXIT THE SITE MUST BE INSPECTED FOR EVIDENCE OF SEDIMENT TRACKING BEYOND THE PERMITTED PROJECT AREA. ALL MATERIALS SPILLED, DROPPED, WASHED OR TRACKED FROM VEHICLES ONTO ROADWAYS OR INTO STORM DRAINS MUST BE REMOVED IMMEDIATELY.
5. ANY SEDIMENT DEPOSITED ON THE ROADWAY SHALL BE SWEPT AS NECESSARY (AND WITHIN THE SAME DAY AS DISCOVERY) AND DISPOSED OF IN AN APPROPRIATE MANNER. SEDIMENT SHALL NOT BE WASHED INTO STORM SEWER SYSTEMS.
6. EXIT(S) SHALL BE MAINTAINED IN A CONDITION WHICH WILL PREVENT TRACKING OR FLOW OF MUD BEYOND THE EXIT(S). THIS MAY REQUIRE PERIODIC TOP DRESSING OF THE CONSTRUCTION EXIT(S) AS CONDITIONS DEMAND.
7. CONTRACTOR SHALL BE PERMITTED TO TURN THE STONE WHEN THE SURFACE BECOMES SMOOTH AND SURFACE VOIDS ARE FILLED TO MAINTAIN EFFECTIVENESS OF CONSTRUCTION EXIT UNTIL SUCH TIME THAT VOIDS BELOW THE SURFACE BECOME FILLED AND THE CONSTRUCTION EXIT IS NO LONGER EFFECTIVE. AT SUCH A TIME THE CONTRACTOR SHALL REMOVE THE INEFFECTIVE STONE AND REPLACE PER DETAIL.
8. IF EXIT BMP IS STILL INEFFECTIVE, GC MUST CONTACT THE ENGINEER AND SUBMIT AN RFI AS NECESSARY.

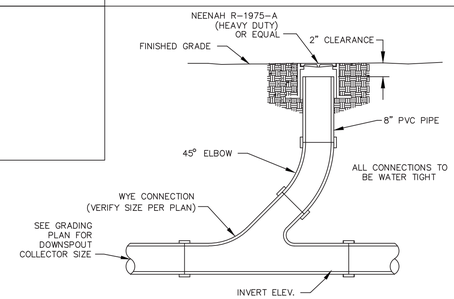

DOWNSPOUT CLEANOUT DETAIL
NO SCALE

NOTES:
1) THE MINIMUM INSIDE WIDTH FOR THE BASE AND RISER SECTIONS SHALL BE 48" FOR ALL STORM SEWERS. MANHOLE SHALL MEET ASTM C-478 REQUIREMENTS.
3) SHAFT STEPS UNIFORMLY SPACED AT 16" O/C. STEPS SHOULD NOT BE OVER TOP OF PIPES AND SHALL EXTEND 4½" FROM WALL.
4) LINE OUTSIDE WITH URETHANE ASPHALT @ 20 MILS

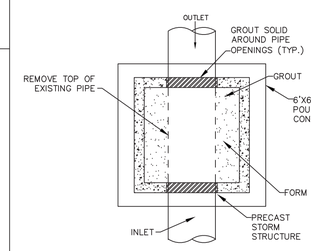

BASE PLAN

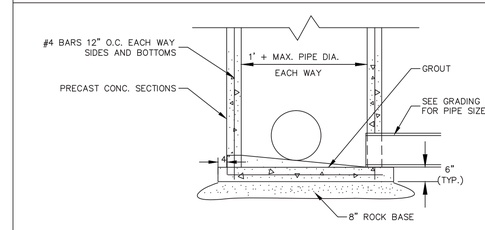

TYPICAL CATCH BASIN BOTTOM DETAIL
NO SCALE

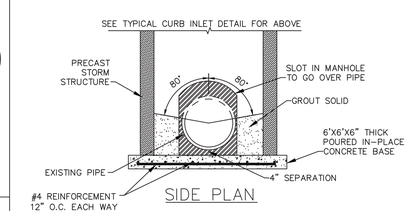

SIDE PLAN

DOGHOUSE CATCH BASIN DETAIL
NO SCALE

1. ALL TRENCHES SHALL HAVE A BEDDING OF WELL GRADED, 1" MINUS, GRANULAR MATERIAL FROM 4" BELOW THE BOTTOM OF THE PIPE TO 1/2 THE DIAMETER OF THE PIPE COMPACTED TO 95% STANDARD PROCTOR DENSITY.
2. IN AREAS TO BE PAVED OVER, ENTIRE TRENCH TO BE BACKFILLED WITH WELL GRADED GRANULAR MATERIAL & COMPACTED TO 95%% OF THE STANDARD PROCTOR DENSITY.
3. IN AREAS OF CLEAN DIRT CUTS OUTSIDE OF PAVED AREAS, TRENCH MAY BE BACKFILLED WITH SAME MATERIAL AND COMPACTED TO 95% OF THE STANDARD PROCTOR DENSITY.
4. IN AREAS OF ROCK CUT, THE TRENCH SHALL BE BACKFILLED WITH WELL GRADED GRANULAR MATERIAL TO 6" ABOVE TOP OF PIPE.
5. CONTRACTOR SHALL BE RESPONSIBLE FOR TRENCH SETTLEMENT.
6. IN AREAS WHERE BACKFILL MATERIAL CONTAINS ROCK, CONTRACTOR TO PLACE 1" MINUS GRANULAR MATERIAL A MINIMUM OF 4" ABOVE PIPES.

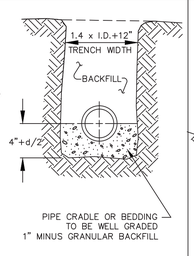

GRAVITY SEWER TRENCHING DETAIL
NO SCALE

1. ALL TRENCHES SHALL HAVE A BEDDING OF WELL GRADED, 1" MINUS, GRANULAR MATERIAL FROM 4" BELOW THE BOTTOM OF THE PIPE.
2. IN AREAS TO BE PAVED OVER, ENTIRE TRENCH TO BE BACKFILLED WITH WELL GRADED GRANULAR MATERIAL & COMPACTED TO 95% OF THE STANDARD PROCTOR DENSITY.
3. IN AREAS OF CLEAN DIRT CUTS OUTSIDE OF PAVED AREAS, TRENCH MAY BE BACKFILLED WITH SAME MATERIAL AND COMPACTED TO 95% OF THE STANDARD PROCTOR DENSITY.
4. IN AREAS OF ROCK CUT, THE TRENCH SHALL BE BACKFILLED WITH WELL GRADED GRANULAR MATERIAL TO 6" ABOVE TOP OF PIPE.
5. BACKFILL SHALL BE HOLLOWED OUT FOR PIPE JOINTS AND FITTINGS. PIPE JOINTS ARE UNSUPPORTED.
6. INSTALLATION OF STORM SEWER TO MEET WITH MANUFACTURES SPECIFICATIONS.
7. ALL STORM SEWER STRUCTURES TO MEET PROJECT SPECIFICATIONS.

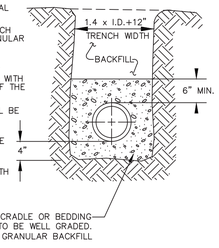

STORM SEWER TRENCHING DETAIL
NO SCALE

INLET PROTECTION
NO SCALE

THE FIRE HYDRANT ASSEMBLY LINE ITEM OF THE BID FORM SHALL INCLUDE THE FITTINGS AND APPURTENANCES SHOWN ON THE FIRE HYDRANT ASSEMBLY DETAIL & DETAIL J OF THIS SHEET

FIRE HYDRANT THRUST BLOCK DIMENSIONS

D	K	V	M	H	N	P	R
6"	28"	6"	24"	24"	42"	36"	30"

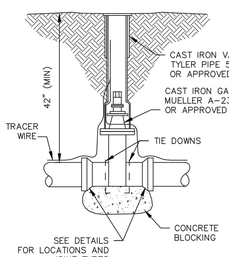

GATE VALVE & VALVE BOX DETAIL
NO SCALE

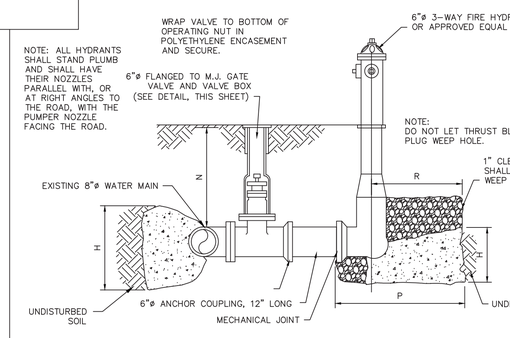

SECTION VIEW

FIRE HYDRANT ASSEMBLY DETAIL
NO SCALE

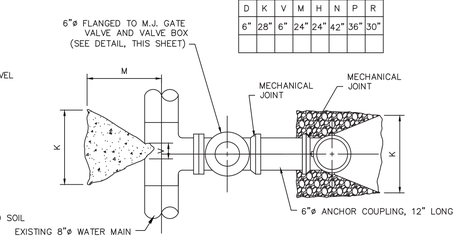

PLAN VIEW-FIRE HYDRANT, AUXILIARY VALVE AND VALVE BOX

PLAN VIEW

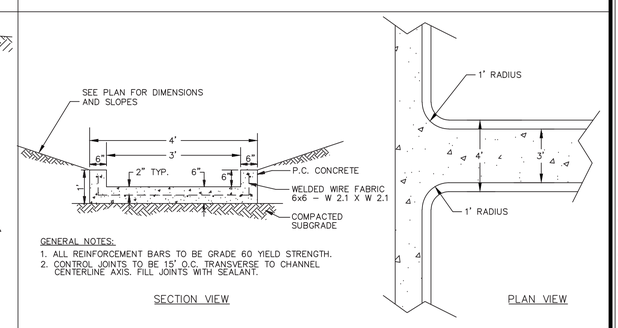

GENERAL NOTES:
1. ALL REINFORCEMENT BARS TO BE GRADE 60 YIELD STRENGTH.
2. CONTROL JOINTS TO BE 15' O.C. TRANSVERSE TO CHANNEL CENTERLINE AXIS. FILL JOINTS WITH SEALANT.

SECTION VIEW

PLAN VIEW

CONCRETE SWALE DETAIL
NO SCALE

OCHRAN
530A E. Independence Dr.
Union, Missouri 63084
636-584-0540 (fax)
636-584-0512 (tel)
mail@ochranengineering.com
• Civil Engineering
• Land Surveying
• Architecture
• Site Development
• General Consulting
• Master Planning

Missouri State Certificate of Authority Numbers:
Survey : 000380
Engineering : 001655
Architecture: 2002014240

Two working days prior to the start of any excavation on this site, contractor shall call Missouri One Call for utility location information.

All OSHA rules & regulations established for the type of construction proposed in these plans shall be strictly followed (ie. Trenching, Blasting, etc.)

STATE OF MISSOURI
DAVID P. VAN LEER
NUMBER PE-2012018147
4/14/17
PROFESSIONAL ENGINEER

David P Van Leer, PE
MO# PE-2012018147

SITE IMPROVEMENT PLANS
SCENIC REGIONAL LIBRARY
WRIGHT CITY, MISSOURI

DATE:	REVISION:	DRN. BY:	APP'D. BY:
04-14-17	ISSUED FOR BID	TES	DPV

DRN. BY: TES
APP'D. BY: DPV
DATE: APR. 14, 2017
SCALE: NO SCALE
PROJ. NO: 16-6414
DWG. NO: D2

DETAIL SHEET

Drawing name: F:\16-6414 - Scenic Regional Library - Wright City\AutoCAD Drawings\Plan Sheets\DETAIL SHEET.dwg Tab: D2 Plotted on: Apr 12, 2017 - 1:22pm Plotted by: rjohanning

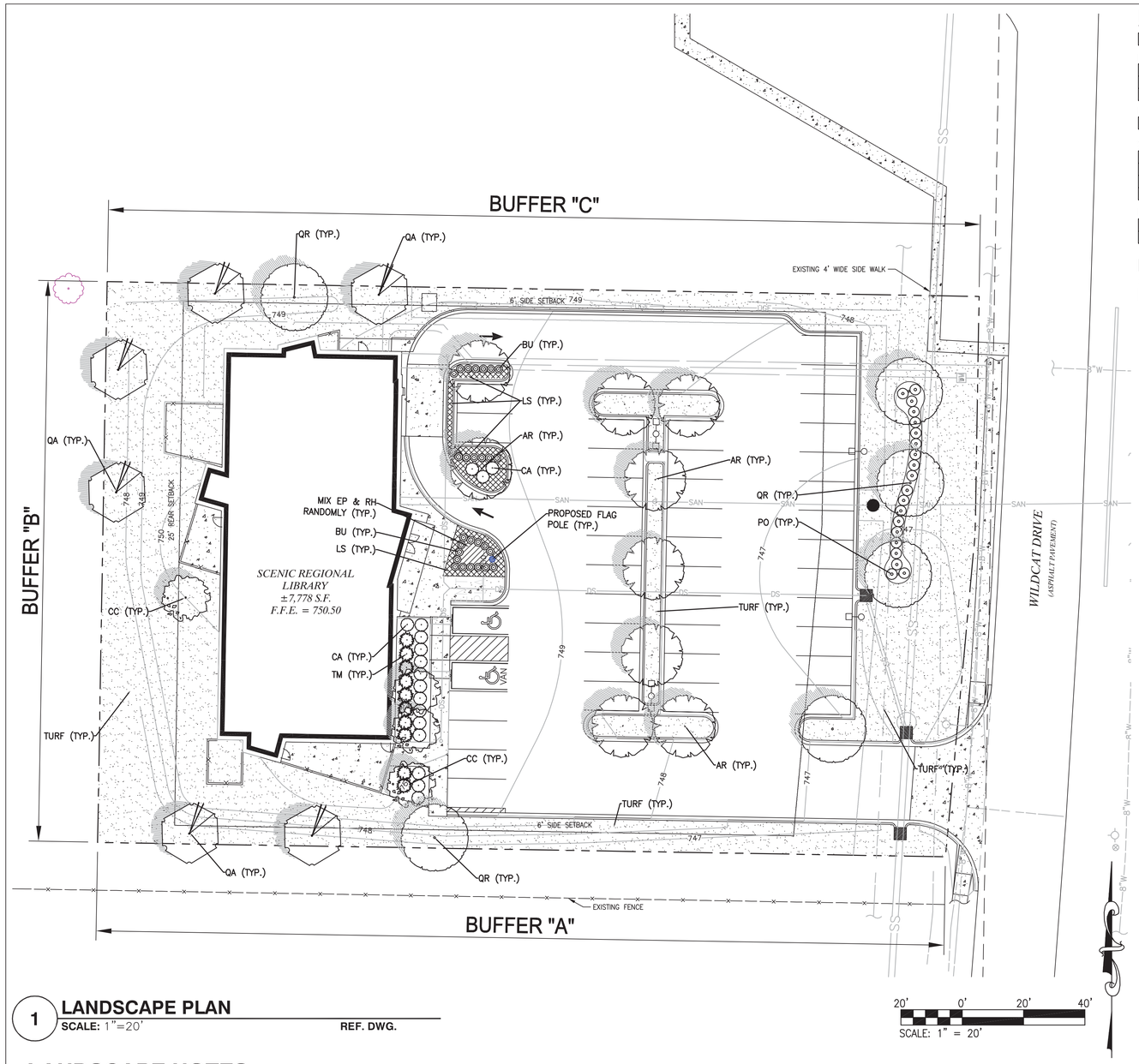

1 **LANDSCAPE PLAN**

SCALE: 1"=20' **REF. DWG.**

PLANT SCHEDULE

CODE	QTY.	GENUS	SPECIES	COMMON NAME	SIZE	COND.	COMMENTS
DECIDUOUS TREES							
QR	6	QUERCUS	RUBRA	NORTHERN RED OAK	2.5" CAL. MIN.	B&B	
AR	9	ACER	RUBRUM	RED MAPLE	2.5" CAL. MIN.	B&B	
QA	6	QUERCUS	ALBA	WHITE OAK	2.5" CAL. MIN.	B&B	
FLOWERING TREES							
CC	4	CERCIS	CANADENSIS	EASTERN REDBUD	1.5" CAL. MIN.	B&B	
SHRUBS							
TM	10	TAXUS	X MEDIA 'DENSIFORMIS'	YEW	3 GAL.	CONT.	
CA	17	CEANOTHUS	AMERICANUS	NEW JERSEY TEA	2 GAL.	CONT.	
BU	28	BUXUS	'GREEN VELVET'	GREEN VELVET BOXWOOD	18"–24" MIN.	CONT.	PLANT 30" O.C.
PO	20	PHYSOCARPUS	OPULIFOLIUS 'NANUS'	DWARF NINEBARK	2 GAL.	CONT.	
NATIVE GRASSES							
EP	15	ECHINACEA	PURPUREA	PURPLE CONEFLOWER	SP4	CONT.	18" O.C.
RH	15	RUDBECKIA	HIRTA	BLACK–EYED–SUSAN	SP4	CONT.	18" O.C.
GROUND COVER							
LS	140	LIRIOPE	SPICATA	LILY TURF	1 GAL.	CONT.	18" O.C.
SEED							
–	2,027	SY	–	FESCUE SEED	SEED	–	

OFF-STREET PARKING AND LOADING REQUIREMENTS

CODE SEC. 405.110 D. (3) – SCREENING AND LANDSCAPING

REQUIREMENTS – WILDCAT LANE FRONTAGE	CALCULATIONS – REQUIRED LANDSCAPE	PROPOSED LANDSCAPE
1 SHRUB FOR EVERY 10 FEET OF LOT FRONTAGE	183.29 LINEAL FEET OF FRONTAGE 183.29/10 = 18.3 = 19 SHRUBS REQUIRED	20 SHRUBS PROPOSED

OFF-STREET PARKING AND LOADING REQUIREMENTS

CODE SEC. 405.110 D. (13) – SCREENING AND LANDSCAPING

REQUIREMENTS – BUFFER A	CALCULATIONS – REQUIRED LANDSCAPE	PROPOSED LANDSCAPE
ALL SIDE AND REAR PROPERTY LINES SHALL CONTAIN DECIDUOUS SHADE TREES WITH A MAX SPACING OF 100 FET	276.8 FEET OF PROPERTY LINE 276.8/100 = 2.76 = 3 SHADE TREES REQUIRED	3 SHADE TREES PROPOSED
REQUIREMENTS – BUFFER B	CALCULATIONS – REQUIRED LANDSCAPE	PROPOSED LANDSCAPE
ALL SIDE AND REAR PROPERTY LINES SHALL CONTAIN DECIDUOUS SHADE TREES WITH A MAX SPACING OF 100 FET	183 FEET OF PROPERTY LINE 183/100 = 1.83 = 2 SHADE TREES REQUIRED	2 SHADE TREES PROPOSED
REQUIREMENTS – BUFFER C	CALCULATIONS – REQUIRED LANDSCAPE	PROPOSED LANDSCAPE
ALL SIDE AND REAR PROPERTY LINES SHALL CONTAIN DECIDUOUS SHADE TREES WITH A MAX SPACING OF 100 FET	284.45 FEET OF PROPERTY LINE 284.45/100 = 2.84 = 3 SHADE TREES REQUIRED	3 SHADE TREES PROPOSED

LANDSCAPE NOTES:

1. LANDSCAPE CONTRACTOR TO VERIFY LOCATION OF UNDERGROUND UTILITIES BEFORE BEGINNING WORK.
2. ALL LANDSCAPE SHALL COMPLY WITH THE CURRENT EDITION OF ANSI Z 60.1 "AMERICAN STANDARD FOR NURSERY STOCK."
3. ALL PLANTS SHALL MEET THE REQUIREMENTS OF THE STATE AND FEDERAL LAW WITH RESPECT TO DISEASE AND INSECT INFESTATION.
4. MULCH AREAS WITH TRIPLE GROUND HARDWOOD MULCH 3" MIN. DEPTH.
5. ALL LANDSCAPE SUBSTITUTIONS MUST BE APPROVED BY THE OWNER'S REPRESENTATIVE/LANDSCAPE ARCHITECT.
6. FORMAL LINES AND GROUPINGS OF A SPECIES OF TREE, SHRUB, OR GROUNDCOVER SHALL BE MATCHED FOR SIZE, FORM, AND COLOR.
7. ALL BACKFILL IN PLANTING BEDS AND TREE PITS SHALL BE BACKFILLED WITH PLANTING SOIL.
8. ALL TREES OUTSIDE OF PLANT BEDS SHALL BE PLANTED WITH A MULCH RING. OBTAIN APPROVAL FROM OWNER'S REPRESENTATIVE/LANDSCAPE ARCHITECT FOR ANY TREES THAT WILL NOT BE MULCHED FOR EXCESSIVE MOISTURE REASONS.
9. ALL LANDSCAPING SHALL BE INSTALLED AS SHOWN ON THE APPROVED PLAN.
10. AT PLANTING, TREE TRUNKS MUST BE STRAIGHT WITH MINIMAL DOGLEGS.
11. WIRE BASKETS, BURLAP WRAPPINGS, ROPE, TWINE OR ANY SIMILAR SHIPPING MATERIALS SHALL BE REMOVED BEFORE PLANTING.
12. A SPADE CUT EDGE SHALL BE CREATED AT ALL LOCATIONS WHERE PLANTING BEDS ARE ADJACENT TO GRASS AREAS UNLESS OTHERWISE NOTED.
13. SEE CIVIL PLANS FOR TYPE AND LOCATION OF EROSION CONTROL MATERIALS.
14. DO NOT DISTURB EXISTING UTILITIES WITHIN WORK AREA, SILT FENCE AND PLANTINGS SHALL AVOID ANY EXISTING UTILITIES.
15. THE CONTRACTOR SHALL FOLLOW THE LANDSCAPE PLANS. ANY SUBSTITUTION OR ALTERATION SHALL NOT BE ALLOWED WITHOUT APPROVAL OF THE OWNER'S REPRESENTATIVE/LANDSCAPE ARCHITECT. OVERALL PLANT QUANTITY AND QUALITY SHALL BE CONSISTENT WITH THE PLANS.
16. THE CONTRACTOR IS RESPONSIBLE FOR VERIFYING ALL PLANT QUANTITIES. WRITTEN QUANTITIES TAKES PRECEDENCE OVER GRAPHIC QUANTITIES. NOTIFY OWNER'S REPRESENTATIVE/LANDSCAPE ARCHITECT OF DISCREPANCIES.
17. THE OWNER'S REPRESENTATIVE/LANDSCAPE ARCHITECT RESERVES THE RIGHT TO INSPECT AND TAG ALL PLANT MATERIAL PRIOR TO SHIPPING TO THE SITE. IN ALL CASES, THE LANDSCAPE ARCHITECT MAY REJECT PLANT MATERIAL AT THE SITE IF MATERIAL IS DAMAGED, DISEASED, OR DECLINING IN HEALTH AT THE TIME OF ONSITE INSPECTIONS OR IF THE PLANT MATERIAL DOES NOT MEET THE MINIMUM SPECIFIED STANDARD IDENTIFIED ON THE PLANS AND IN THE SPECIFICATIONS. THE CONTRACTOR SHALL COORDINATE WITH THE OWNER'S REPRESENTATIVE/LANDSCAPE ARCHITECT FOR INSPECTION AND APPROVAL OF ALL MATERIALS AND PRODUCTS PRIOR TO INSTALLATION.
18. THE OWNER'S REPRESENTATIVE/LANDSCAPE ARCHITECT MAY ELECT TO UPSIZE PLANT MATERIAL AT THEIR DISCRETION BASED ON SELECTION, AVAILABILITY, OR TO ENHANCE SPECIFIC AREAS OF THE PROJECT. THE CONTRACTOR SHALL VERIFY PLANT MATERIAL SIZES WITH OWNER'S REPRESENTATIVE/LANDSCAPE ARCHITECT PRIOR TO PURCHASING, SHIPPING OR STOCKING OF PLANT MATERIALS. SUBMIT CHANGE ORDER REQUEST TO OWNER'S REPRESENTATIVE/LANDSCAPE ARCHITECT FOR APPROVAL IF ADDITIONAL COST IS REQUESTED BY THE CONTRACTOR PRIOR TO INSTALLATION. RE–STOCKING CHARGES WILL NOT BE APPROVED IF THE CONTRACTOR FAILS TO SUBMIT A REQUEST FOR MATERIAL CHANGES.
19. THE CONTRACTOR SHALL WARRANTY ALL CONTRACTED WORK AND MATERIALS FOR A PERIOD OF ONE YEAR AFTER SUBSTANTIAL COMPLETION HAS BEEN ISSUED BY THE OWNER'S REPRESENTATIVE/LANDSCAPE ARCHITECT FOR THE ENTIRE PROJECT UNLESS OTHERWISE SPECIFIED IN THE CONTRACT DOCUMENTS OR SPECIFICATIONS.
20. THE DEVELOPER, HIS SUCCESSORS AND ASSIGNS SHALL BE RESPONSIBLE FOR THE INSTALLATION, MAINTENANCE AND REPLACEMENT OF ALL LANDSCAPING MATERIALS SHOWN OR INDICATED ON THE APPROVED LANDSCAPE PLAN ON FILE WITH THE PLANNING DEPARTMENT. ALL LANDSCAPING WILL BE INSTALLED AS DELINEATED ON THE PLAN, PRIOR TO ISSUANCE OF CERTIFICATE OF OCCUPANCY.
21. PRIOR TO INSTALLATION OF PLANT MATERIALS, AREAS THAT HAVE BEEN COMPACTED OR DISTURBED BY CONSTRUCTION ACTIVITY SHALL BE THOROUGHLY LOOSENED TO A DEPTH OF 8" – 12" AND AMENDED PER SPECIFICATIONS.
22. ALL LANDSCAPED AREAS ARE TO HAVE SOIL PREPARATION PER SPECIFICATIONS. (MINIMUM RATE OF 3 CU. YDS. OF ORGANIC MATTER PER 1000 S.F.). TREES SHALL NOT BE LOCATED IN DRAINAGE SWALES, DRAINAGE AREAS, OR UTILITY EASEMENTS. CONTACT OWNER'S REPRESENTATIVE/LANDSCAPE ARCHITECT FOR RELOCATION OF PLANTS IN QUESTIONABLE AREAS PRIOR TO INSTALLATION.
23. ALL EVERGREEN TREES SHALL BE FULLY BRANCHED TO THE GROUND AND SHALL NOT EXHIBIT SIGNS OF ACCELERATED GROWTH AS DETERMINED BY THE OWNER'S REPRESENTATIVE/LANDSCAPE ARCHITECT.
24. ALL TREES ARE TO BE STAKED AND GUYED PER DETAILS FOR A PERIOD OF 1 YEAR. THE CONTRACTOR SHALL BE RESPONSIBLE FOR REMOVING STAKES AT THE END OF 1 YEAR FROM ACCEPTANCE OF LANDSCAPE INSTALLATION BY THE OWNER'S REPRESENTATIVE/LANDSCAPE ARCHITECT. OBTAIN APPROVAL BY OWNER'S REPRESENTATIVE PRIOR TO REMOVAL.
25. ALL TREES INSTALLED ABOVE RETAINING WALLS UTILIZING GEO–GRID MUST BE HAND DUG TO PROTECT GEO–GRID. IF GEO–GRID MUST BE CUT TO INSTALL TREES, APPROVAL MUST BE GIVEN BY OWNER'S REPRESENTATIVE/LANDSCAPE ARCHITECT PRIOR TO DOING WORK.
26. PLACE PLANT MATERIAL IN SHRUB BED SO THAT ONCE PLANTS GROW TO FULL SIZE THEY ARE FULLY CONTAINED WITHIN THE SHRUB BED AREA AND DO NOT HANG OVER THE EDGER LINE.
27. THE LANDSCAPE CONTRACTOR SHALL BE RESPONSIBLE FOR ENSURING POSITIVE DRAINAGE EXISTS IN ALL LANDSCAPE AREAS. SURFACE DRAINAGE ON LANDSCAPE AREAS SHALL NOT FLOW TOWARD STRUCTURES AND FOUNDATIONS. MAINTAIN SLOPE AWAY FROM FOUNDATIONS PER THE GEOTECHNICAL REPORT RECOMMENDATIONS. ALL LANDSCAPE AREAS BETWEEN WALKS AND CURBS SHALL DRAIN FREELY TO THE CURB UNLESS OTHERWISE IDENTIFIED ON THE GRADING PLAN. IN NO CASE SHALL THE GRADE, TURF THATCH, OR OTHER LANDSCAPE MATERIALS DAM WATER AGAINST WALKS. MINIMUM SLOPES ON LANDSCAPE AREAS SHALL BE 2%; MAXIMUM SLOPE SHALL BE 25% UNLESS SPECIFICALLY IDENTIFIED ON THE PLANS OR APPROVED BY THE OWNER'S REPRESENTATIVE/LANDSCAPE ARCHITECT.
28. SHRUB, GROUNDCOVER AND PERENNIAL BEDS ARE TO BE CONTAINED BY A SPADE CUT EDGE. EDGER IS NOT REQUIRED WHEN ADJACENT TO CURBS, WALLS, WALKS OR SOLID FENCES WITHIN 3" OF PRE–MULCHED FINAL GRADE. EDGER SHALL NOT BE REQUIRED TO SEPARATE MULCH TYPES UNLESS SPECIFIED ON THE PLANS.
29. ALL SHRUB BEDS ARE TO BE MULCHED WITH MIN. 3" DEPTH, SHREDDED HARDWOOD BARK MULCH.
30. AT SEED AREA BOUNDARIES ADJACENT TO EXISTING NATIVE AREAS, OVERLAP ABUTTING NATIVE AREAS BY THE FULL WIDTH OF THE SEEDER.
31. EXISTING TURF AREAS THAT ARE DISTURBED DURING CONSTRUCTION, ESTABLISHMENT AND THE MAINTENANCE PERIOD SHALL BE RESTORED WITH SEED TO MATCH EXISTING TURF SPECIES.
32. CONTRACTOR SHALL OVER SEED ALL MAINTENANCE OR SERVICE ACCESS BENCHES AND ROADS WITH SPECIFIED SEED MIX UNLESS OTHERWISE NOTED ON THE PLANS.
33. ALL SEEDED SLOPES EXCEEDING 25% IN GRADE (4:1) SHALL RECEIVE EROSION CONTROL BLANKETS. PRIOR TO INSTALLATION, NOTIFY OWNER'S REPRESENTATIVE FOR APPROVAL OF LOCATION AND ANY ADDITIONAL COST IF A CHANGE ORDER IS NECESSARY.
34. WHEN COMPLETE, ALL GRADES SHALL BE WITHIN +/– 1/8" OF FINISHED GRADES AS SHOWN ON THE PLANS.

Scenic Regional Library
read, explore, grow

SCENIC REGIONAL LIBRARY
WRIGHT CITY BRANCH
60 WILDCAT DRIVE
WRIGHT CITY, MO 63390

JEMA
SDA ARCHITECTS

ARCHITECT-OF-RECORD
JEMA
3005 LOCUST ST.
ST. LOUIS, MO 63103
T (314) 531-7400
CONTACT: SCOTT CLARK
E-MAIL: SCLARK@JEMASTL.COM

DESIGN ARCHITECT
SAPP DESIGN ASSOCIATES ARCHITECTS
3750 SOUTH FREMONT
SPRINGFIELD, MO 65804
T (417) 877-9600
F (417) 877-9696
CONTACT: JAMES STUFFLEBEAM
E: STUFFLEBEAM@SDAARCHITECTS.COM

CIVIL
COCHRAN
530A E. INDEPENDENCE DRIVE
UNION, MO 63084
CONTACT: DAVE VAN LEER
T (636) 584-0540
F (636) 584-0512
E-MAIL: DVANLEER@COCHRAN.COM

STRUCTURAL
ALPER AUDI, INC.
1804 BORMAN CIRCLE DRIVE
ST. LOUIS, MO 63146
T (314) 432-8600
F (314) 807-2774
CONTACT: STEVE EHRETT
E-MAIL: STEVE.EHRETT@ALPERAUDI.COM

MECHANICAL, ELECTRICAL, PLUMBING
BRIC PARTNERSHIP, LLC
343 S. KIRKWOOD ROAD, SUITE 204
KIRKWOOD, MO 63122
T (314) 725-5889
CONTACT: BRUCE COLEMAN
E: BCOLEMAN@BRICPARTNERSHIP.COM

No.	Date	Description
	04/14/17	ISSUED FOR BID

DRAWN BY: **J.C.H.**

PROJECT NUMBER: **16-1161.03**

SHEET TITLE:
LANDSCAPE PLAN

L1.0

DRAWING SYMBOLS LEGEND:

- GRID LINES (symbol: 1 / A)
- VIEW TITLE (symbol: 1 / A-201 — VIEW TITLE / SCALE)
- NORTH ARROW (symbol: NORTH)
- REFERENCE TO INFORMATION ENLARGED ELSEWHERE (symbol: 1 / A-201)
- SECTION REFERENCE (symbol: SIM, 1 / A101)
- ELEVATION - SINGLE REFERENCE (symbol: 1, A101)
- ELEVATION - MULTIPLE REFERENCES (symbol: 1, 1, A101, 1, 1)
- ROOM NUMBER TAG (symbol: 101 — ROOM NUMBER, FLOOR NUMBER)
- DOOR NUMBER TAG (symbol: 909B — SUFFIX AS REQ'D, ROOM NUMBER)
- PARTITION TYPE TAG (symbol: P10a — SUB-TYPE, TYPE DESIGNATION)
- KEYNOTE TAG (symbol: 1)
- WINDOW TAG (symbol: 1)
- FINISH TAG (symbol: XXXX)
- REVISION CLOUD AND DELTA (symbol: 1)

ABBREVIATIONS LEGEND:

A		M	
AFF	ABOVE FINISHED FLOOR	MAX	MAXIMUM
ACT	ACOUSTICAL CEILING TILE	MECH	MECHANICAL
ALT	ALTERNATE	MEP	MECH., ELECT., AND PLUMBING
ALUM	ALUMINUM		
APPROX	APPROXIMATE(LY)	MTL	METAL
ARCH	ARCHITECT(URAL)	MIN	MINIMUM
		MISC	MISCELLANEOUS
B			
BLKG	BLOCKING	N	
BLDG	BUILDING	NIC	NOT IN CONTRACT
BD	BOARD	NTS	NOT TO SCALE
C		O	
CFCI	CONTRACTOR FURNISHED, CONTRACTOR INSTALLED	OFCI	OWNER FURNISHED, CONTRACTOR INSTALLED
C	CENTERLINE	OFOI	OWNER FURNISHED, OWNER INSTALLED
CLG	CEILING		
CT	CERAMIC TILE	OC	ON CENTER
CLR	CLEAR	OH	OPPOSITE HAND
CONC	CONCRETE	OPG	OPENING
CONT	CONTINUE, CONTINUOUS	OPP	OPPOSITE
CJ	CONTROL JOINT		
CORR	CORRIDOR	P	
		PLAM	PLASTIC LAMINATE
D		PT	PAINT(ED)
DIA	DIAMETER	PTN	PARTITION
DIM	DIMENSION(S)	PWD	PLYWOOD
E		Q	
EA	EACH	QTY	QUANTITY
ELEC	ELECTRIC(AL)		
ELEV	ELEVATION	R	
EQ	EQUAL	RCP	REFLECTED CEILING PLAN
EQUIP	EQUIPMENT	REF	REFERENCE
EXP	EXPANSION	REINF	REINFORCE(D)
EJ	EXPANSION JOINT	REQ	REQUIRED
EXIST	EXISTING	REV	REVISION
EXT	EXTERIOR	RB	RESILIENT BASE
F		S	
FIN	FINISH(ED)	SAB	SOUND ATTENUATION BATTS
FIN FLR	FINISHED FLOOR	SC	SOLID CORE
FE	FIRE EXTINGUISHER	SF	SQUARE FOOT (FEET)
FEC	FIRE EXTINGUISHER	SIM	SIMILAR
CABINET		SPEC	SPECIFICATION
FLR	FLOOR	SQ	SQUARE
FD	FLOOR DRAIN	SQ FT	SQUARE FOOT (FEET)
FLUOR	FLUORESCENT	STL	STEEL
FOS	FACE OF SHEATHING	SUSP	SUSPEND(ED)
FRT	FIRE-RETARDANT TREATED	SYM	SYMMETRICAL
G		T	
GA	GAUGE	TFCI	TENANT (CLIENT) FURNISHED, CONTRACTOR INSTALLED
GC	GENERAL CONTRACTOR		
GYP BD	GYPSUM BOARD	TFTI	TENANT (CLIENT) FURNISHED, TENANT INSTALLED
H		TEL	TELEPHONE
HCP	HANDICAPPED	TEMP	TEMPERED
HDW	HARDWARE	TOS	TOP OF STRUCTURE
HT	HEIGHT	TOW	TOP OF WALL
HC	HOLLOW CORE	TYP	TYPICAL
HM	HOLLOW METAL		
HOR	HORIZONTAL	U	
HR	HOUR	UL	UNDERWRITERS LABORATORIES, INC.
HVAC	HEATING, VENTILATION, AND AIR CONDITIONING	UNO	UNLESS NOTED OTHERWISE
I		V	
INCL	INCLUDE(D)	VERT	VERTICAL
INSUL	INSULATION		
INT	INTERIOR	W	
		WC	WALL COVERING
J		W/	WITH
JT	JOINT	W/O	WITHOUT
		WD	WOOD
L			
LAM	LAMINATE		

DEFINITION OF TERMS:

1. THE WORD "CLIENT" AS USED IN THESE DOCUMENTS REFERS TO THE ENTITY WHO HAS CONTRACTED THE ARCHITECT TO PERFORM PROFESSIONAL SERVICES ON THIS PROJECT.
2. THE WORD "PROJECT" AS USED IN THESE DOCUMENTS REFERS TO THE SCOPE OF WORK DESCRIBED IN THESE DOCUMENTS.
3. THE WORDS "CONTRACTOR", "GENERAL CONTRACTOR", AND "G.C." AS USED IN THESE DOCUMENTS REFER TO THE GENERAL CONTRACTOR SELECTED BY THE CLIENT TO PERFORM THE WORK DESCRIBED IN THESE DOCUMENTS. ALL NOTES IN THESE DOCUMENTS INSTRUCT THE GENERAL CONTRACTOR.
4. THE WORD "ARCHITECT" AS USED IN THESE DOCUMENTS REFERS TO ARCHITE-OF-RECORD, JEMA.
5. THE WORDS "CONSTRUCTION TEAM" REFER TO ALL PARTIES INVOLVED IN THE CONSTRUCTION PHASE, INCLUDING BUT NOT LIMITED TO: THE CLIENT AND THEIR CONSULTANTS; THE BUILDING OWNER; THE CONSTRUCTION MANAGER; THE GENERAL CONTRACTOR AND ALL SUBCONTRACTORS; THE CONSULTING ENGINEERS AND THE ARCHITECT.
6. THE WORD "ALIGN" AS USED IN THESE DOCUMENTS SUPERSEDES ANY DIMENSIONAL INFORMATION INDICATED. IF DISCREPANCIES OCCUR, NOTIFY ARCHITECT IMMEDIATELY.
7. THE WORD "PROVIDE" AS USED IN THESE DOCUMENTS MEANS FURNISH AND INSTALL.
8. THE WORD "CLEAR" AS USED IN THESE DOCUMENTS SHALL MEAN THAT THE CONDITION IS NOT ADJUSTABLE WITHOUT THE APPROVAL OF THE ARCHITECT. CLEAR DIMENSIONS ARE TYPICALLY TO FINISH FACE OF MAJOR SURFACE. COORDINATE REQUIREMENTS FOR BASE BOARD HEATERS OR OTHER PROTRUSIONS WITH ARCHITECT.
9. THE WORD "MAXIMUM" OR "MAX." AS USED IN THESE DOCUMENTS SHALL MEAN THE CONDITION IS SLIGHTLY ADJUSTABLE BUT MAY NOT VARY TO A DIMENSION OR QUANTITY GREATER THAN THAT SHOWN WITHOUT APPROVAL OF THE ARCHITECT.
10. THE WORD "MINIMUM" OR "MIN" AS USED IN THESE DOCUMENTS SHALL MEAN THE CONDITION IS SLIGHTLY ADJUSTABLE BUT MAY NOT VARY TO A DIMENSION OR QUANTITY LESS THAN THAT SHOWN WITHOUT APPROVAL OF THE ARCHITECT.
11. THE WORD "TYPICAL" OR "TYP" AS USED IN THESE DOCUMENTS SHALL MEAN THE CONDITION OR DIMENSION IS THE SAME OR REPRESENTATIVE FOR SIMILAR CONDITIONS THROUGHOUT.
12. THE SYMBOL "+/-" AS USED IN THESE DOCUMENTS SHALL MEAN THE DIMENSION OR QUANTITY IS ADJUSTABLE TO ACCOMMODATE ACTUAL CONDITIONS. IF ACTUAL DIMENSION VARIES BY MORE THAN 1" FROM DIMENSION NOTED AS "+/-", INFORM ARCHITECT BEFORE PROCEEDING.

GENERAL NOTES: REFLECTED CEILING PLAN

1. REVIEW CEILING LAYOUT AS SHOWN AND NOTIFY ARCHITECT OF ANY CONFLICTS WITH STRUCTURAL, ELECTRICAL, MECHANICAL, PIPEWORK, FIRE PROTECTION SYSTEMS, ETC. BEFORE PROCEEDING WITH CONSTRUCTION.
2. U.N.O. ALL NEW SUSPENDED ACOUSTICAL CEILING GRID AND TILE SYSTEMS ON PLAN TO BE ACT-1. CENTER GRID ON COLUMN CENTERLINE OR REFERENCE GRID STARTING POINT ON PLAN. REFER TO FINISH LEGEND FOR SPECIFICATION.
3. INSTALL NEW CEILINGS TO COMPLY WITH ALL SEISMIC RESTRAINT REQUIREMENTS IN ACCORDANCE WITH ALL LOCAL BUILDING CODES. REFER TO SEISMIC INFORMATION ON SHEET A-001.
4. U.N.O. LOCATE DOWNLIGHTS AND WALL WASHERS IN CENTER OF CEILING TILE. IF CONFLICT OCCURS, NOTIFY ARCHITECT PRIOR TO PROCEEDING.
5. CONTRACTOR TO VERIFY EXACT LOCATION OF ALL RECESSED DOWNLIGHTING IN G.W.B. CEILINGS. COORDINATE WITH ARCHITECT BEFORE PROCEEDING WITH THE WORK.
6. REFER TO LIGHT FIXTURE LEGEND FOR LIGHT FIXTURE SPECIFICATION AND ADDITIONAL INFORMATION.
7. U.N.O. ALL G.W.B. CEILINGS TO BE PAINTED PT-2. REFER TO FINISH LEGEND FOR SPECIFICATION.
8. VERIFY EXACT LOCATION OF ALL RECESSED DOWNLIGHTING IN G.W.B CEILINGS. COORDINATE WITH ARCHITECT BEFORE PROCEEDING WITH THE WORK.
9. U.N.O. INSTALL LINEAR DIFFUSERS IN ALL G.W.B. AND A.C.T. CEILINGS.
10. U.N.O. ALL SPRINKLER HEADS IN G.W.B. AND A.C.T. CEILINGS TO BE FULLY RECESSED TYPE. CENTER ALL SPRINKLER HEADS WITHIN 3" OF CENTER OF A.C.T.
11. REFER TO ELEVATIONS FOR EXACT MOUNTING HEIGHTS OF ALL WALL-MOUNTED LIGHT FIXTURES.
12. COORDINATE AND VERIFY LOCATION OF LIGHT SWITCHES, THERMOSTATS, FIRE ALARMS, ETC. WITH ARCHITECT BEFORE INSTALLATION.
13. REFER TO ELECTRICAL DRAWINGS FOR DEVICE LOCATION DIAGRAM.
14. ALL EXPOSED CEILING EDGES TO BE FINISHED.
15. U.N.O. ALL G.W.B. CEILINGS IN RESTROOMS, SHOWER ROOMS AND OTHER WET LOCATIONS TO BE MOISTURE RESISTANT.
16. ELECTRICAL CONTRACTOR TO COORDINATE SWITCHING AND DIMMING REQUIREMENTS AND LOCATIONS WITH ARCHITECT.
17. U.N.O. LIGHTING IN EACH ROOM TO BE SWITCHED FROM ONE LOCATION WITHIN THAT ROOM.
18. U.N.O. ALL LIGHT FIXTURE TYPES WITHIN EACH ROOM OR OPEN OFFICE AREA TO BE SWITCHED SEPARATELY. GANG ALL SWITCHES IN EACH ROOM UNDER A SINGLE COVERPLATE.
19. U.N.O. POWER OUTLETS, COMMUNICATIONS RECEPTACLES, COVER PLATES, DEVICES, ETC. TO BE BUILDING STANDARD HEIGHT. REFER TO ELECTRICAL SHEETS FOR ELEC/COMM SYMBOLS AND ADDITIONAL INFORMATION.
20. IDENTIFY AND COORDINATE LOCATIONS FOR ALL CEILING ELEMENTS INCLUDING LIGHTING, MECHANICAL DIFFUSERS, RETURN AIR GRILLES, FIRE PROTECTION DEVICES, ACCESS PANELS, EXIT SIGNS, AUDIOVISUAL EQUIPMENT, SECURITY DEVICES, ETC. WITH ARCHITECT BEFORE INSTALLATION.
21. NOTIFY ARCHITECT OF ANY REQUIREMENTS FOR ACCESS PANELS NOT SHOWN ON DOCUMENTS BEFORE PROCEEDING WITH CONSTRUCTION.
22. ELECTRICAL CONTRACTOR IS RESPONSIBLE FOR VERIFYING QUANTITY AND LOCATION OF EXIT LIGHTING. EXIT LIGHTING IS SHOWN IN PLANS ONLY TO IDENTIFY PATHS OF EGRESS.
23. ALL EXPOSED DUCTWORK TO BE RIGID METAL DUCTWORK.
24. U.N.O. PAINT ALL EXPOSED CEILINGS ELEMENTS INCLUDING BUT NOT LIMITED TO STRUCTURE, UNDERSIDE OF ROOF DECK, DUCTWORK, CONDUIT, PIPING, WIRING, AND SPRINKLER SYSTEMS PT-2.

GENERAL NOTES: FINISH

1. G.C. TO REVIEW AND SUBMIT TO ARCHITECT ALL MATERIALS IN FINISH LEGEND. REFER TO PLANS, RCP, ELEVATIONS, FINISH SCHEDULE, DOOR SCHEDULE, AND DETAILS FOR FINISH INFORMATION AND LOCATIONS. SAMPLES TO BE THE SPECIFIED COLOR AND FINISH FOR REVIEW. SUPPLY A MINIMUM OF FIVE COPIES OF EACH ITEM: ARCHITECT, GENERAL CONTRACTOR, SUB-CONTRACTOR, FIELD COPY, AND CLIENT.
2. REFER TO PLANS, RCP, FINISH LEGEND, AND DETAILS TO VERIFY FINISHES. REFER TO ELEVATIONS FOR ADDITIONAL FINISH INFORMATION OR WHERE MULTIPLE FINISHES ARE INDICATED ON PLAN FOR THE SAME WALL.
3. THE FINISH NAME TAKES PRECEDENT OVER THE FINISH PRODUCT NUMBER WHEN ORDERING MATERIALS. CONTACT ARCHITECT WITH DISCREPANCIES BEFORE ORDERING MATERIALS.
4. IDENTIFY AND INFORM CONSTRUCTION TEAM OF ALL CRITICAL PATH ITEMS, CRITICAL DEADLINES, AND DATE OF SUBSTANTIAL COMPLETION.
5. PATCH AND REPAIR EXISTING FINISHES AS REQUIRED WHERE DEMOLITION OR NEW CONSTRUCTION OCCURS. NEW FINISHES TO MATCH EXISTING IN MANUFACTURER, COLOR, FINISH, AND TEXTURE. WHERE MATERIALS ARE NOT AVAILABLE FOR EXACT MATCH, SUBMIT MATERIALS FOR SUITABLE REPLACEMENT BEFORE PURCHASE OR INSTALLATION.
6. PATCH AND REPAIR OR REPLACE ANY EXISTING FINISHES IN BUILDING COMMON AREAS OUTSIDE SCOPE OF WORK IF DAMAGE OCCURS RELATED TO THE CONSTRUCTION OF THE SCOPE OF WORK.
7. ALL INTERIOR FINISH AND SUNDRIES TO MEET OR EXCEED CLASS II FLAME SPREAD, 26 - 75 AND SMOKE DEVELOPMENT RATING LESS THAN 450 AND ALL OTHER APPLICABLE CODES.
8. ALL IMPACT-RESISTANT PANELS TO BE CLASS 1 COMPONENTS. TESTED IN ACCORDANCE WITH UL-723 (ASTM-E849A) FLAME SPREAD 20 OR LESS. SMOKE DEVELOPED 400 OR LESS.
9. ALL VINYL WALL COVERING FIRE HAZARD CLASSIFICATION (ASTM-E-84) FLAME SPREAD 5, FUEL CONTRIBUTION 0, SMOKE DENSITY FACTOR 5.
10. MAINTAIN AND PROTECT EXISTING FLOORING AND FINISHES TO REMAIN DURING CONSTRUCTION. CLEAN AND PREPARE FLOOR AREA SCHEDULED TO RECEIVE NEW FLOORING SO THE AREAS ARE ABLE TO ACCEPT NEW FLOORING, AND MAINTAIN REQUIRED FLOOR ASSEMBLY RATING, TO BE FLUSH AND CONTINUOUS WITH ADJACENT FLOOR SURFACE, AS REQUIRED FOR NEW FINISH.
11. U.N.O. ALL PARTITIONS, EXTERIOR WALLS AND COLUMNS TO RECEIVE PAINT PT-1 AND BASE RB-1.
12. U.N.O. ALL G.W.B. CEILINGS TO BE PAINTED PT-2. REFER TO REFLECTED CEILING PLAN FOR ADDITIONAL CEILING FINISHES.
13. U.N.O. ALL HOLLOW METAL FRAMES TO RECEIVE PAINT PT-3. REFER TO DOOR SCHEDULE FOR ADDITIONAL INFORMATION.
14. U.N.O. ALL METAL DOORS TO RECEIVE PAINT PT-3. REFER TO DOOR SCHEDULE FOR ADDITIONAL INFORMATION.
15. U.N.O. ALL PAINTED SURFACES TO RECEIVE A MINIMUM OF ONE (1) PRIMER COAT AND THEN TWO (2) FINISH PAINT COATS. TINT PRIMER COAT PER MANUFACTURER'S SPECIFICATIONS.
16. U.N.O. ALL PARTITIONS RECEIVING PAINT (PT-?), (PT-?), OR (PT-?) TO RECEIVE A LEVEL FIVE (5) FINISH PRIOR TO PRIME AND FINISH COATS TO AVOID PAINT FLASHING. ADDITIONAL FINISH COATS WILL BE REQUIRED.
17. U.N.O. ALL GLASS IN DOORS AND SIDELITES TO BE GLASS GL-2.
18. U.N.O. ALL WOOD DOORS AND TRIM TO RECEIVE STAIN ST-1. REFER TO DOOR SCHEDULE FOR ADDITIONAL INFORMATION.
19. ANY WALLCOVERING WITH RECOR BACKING TO BE ADHERED WITH HEAVY-DUTY CLAY ADHESIVE.
20. CLEAN AND PREPARE FLOOR AREA TO ACCEPT NEW FLOORING, MAINTAINING REQUIRED FLOOR ASSEMBLY RATING, TO BE FLUSH AND CONTINUOUS WITH ADJACENT FLOOR SURFACE, AS REQUIRED FOR NEW FINISH.
21. U.N.O. ALL FLOORING SHALL BE INSTALLED PER MANUFACTURER'S RECOMMENDATION. VERIFY WITH ALL MANUFACTURERS AND SUPPLIERS.
22. U.N.O. ALL FLOORING TRANSITIONS TO BEGIN AT CENTER LINE UNDER DOOR. REFER TO TRANSITION DETAILS FOR ALL FLOORING CHANGES.
23. U.N.O. ALL RESILIENT BASE TO BE RESILIENT BASE RB-1, 4" STRAIGHT AT CARPET AND 4" COVE AT HARD SURFACE FLOORING.
24. U.N.O. ALL RESILIENT AND TILE FLOORING TO EXTEND UNDER MILLWORK.
25. ALL COUNTERTOP EDGE PROFILES TO BE AN EASED EDGE.
26. REFER TO INTERIOR ELEVATIONS AND MILLWORK SECTIONS FOR FINISH INFORMATION.
27. U.N.O. ALL WALLCOVERING SHALL BE INSTALLED PER MANUFACTURER'S INSTRUCTIONS. AFTER HANGING 3 LENGTHS OF THE WALLCOVERING MATERIAL, CHECK FOR ANY DEFECTS. IF THERE IS A PROBLEM CONTACT YOUR SUPPLIER IMMEDIATELY, IF THE PROBLEM CAN NOT BE RESOLVED IN A TIMELY MANNER, CONTACT THE ARCHITECT.
28. U.N.O. ALL CABINETS HARDWARE PULLS HW-1.
29. U.N.O. ALL MILLWORK BACKSPLASHES TO BE 4" TALL.
30. U.N.O. ALL EXPOSED ENDS AND OPEN MILLWORK TO MATCH FINISH OF EXTERIOR MILLWORK.
31. U.N.O. ALL MILLWORK INTERIORS TO BE WHITE MELAMINE.
32. PAINT ALL PLYWOOD TO MATCH NEW WALL FINISH TO WHICH IT IS ATTACHED.
33. WOOD VENEERS TO BE APPLIED FLUSH AND SMOOTH TO SUBSTRATE WITH NO RIPPLING TOLERATED.
34. NO GLUE UP WOOD BASE TOLERATED.
35. ALL WOOD SHALL BE OF THE SAME SPECIES AND SAME CUT OF WOOD.
36. ALL WOOD (VENEER, HARDWOOD) SHALL BE ORDERED AT THE SAME TIME FROM THE SAME LOT WITH A SAMPLE FROM THE LOT SUBMITTED TO THE ARCHITECT FOR APPROVAL. NOTIFY ARCHITECT IMMEDIATELY OF NEED TO HAVE TWO LOTS OF WOOD, IN WHICH CASE A SAMPLE FROM EACH LOT MUST BE SUBMITTED FOR APPROVAL.
37. MILLWORK CONSTRUCTION TO COMPLY WITH LATEST EDITION OF A.W.I. STANDARDS.

U.N.O. ALL PAINTED SURFACES TO RECEIVE THE FOLLOWING FINISHES:
- G.W.B. VERTICAL WALL SURFACES - EGGSHELL (SATIN)
- G.W.B. CEILINGS, SOFFITS, BULKHEADS - FLAT
- HOLLOW METAL SURFACES - SEMI-GLOSS
- PAINTED WOOD SURFACES - SEMI-GLOSS
- CONCRETE MASONRY UNIT - EGGSHELL

GENERAL NOTES: ARCHITECTURAL

1. THE CONTRACTOR SHALL VISIT THE SITE AND BE KNOWLEDGEABLE OF CONDITIONS THEREON, AND SHALL INVESTIGATE, VERIFY AND BE RESPONSIBLE FOR ALL CONDITIONS OF THE PROJECT, AND SHALL NOTIFY THE OWNER OF ANY CONDITIONS REQUIRING MODIFICATION BEFORE PROCEEDING WITH THE WORK.
2. THE CONTRACTOR SHALL THOROUGHLY REVIEW THE CONTRACT DOCUMENTS PRIOR TO CONSTRUCTION AND AS AMENDMENTS MAY BE MADE AS CONSTRUCTION PROCEEDS, AND SHALL NOTIFY THE ARCHITECT OF ANY DISCREPANCIES, CONFLICTS, INCONSISTENCIES, ERRORS OR OMISSIONS THAT MAY BE DISCOVERED. IN SUCH CASES THE CONTRACTOR IS TO OBTAIN CLARIFICATION OR VERIFICATION OF INTENT PRIOR TO PROCEEDING WITH THE WORK.
3. THE WORK IS TO BE PERFORMED IN CONFORMANCE WITH APPLICABLE WRITTEN CODES, ORDINANCES, LAWS, RULES, REGULATIONS AND REQUIREMENTS OF AUTHORITIES HAVING JURISDICTION. IF THE CONTRACTOR PERFORMS OR PROCEEDS IN A MANNER CONTRARY TO ANY SUCH REQUIREMENTS THE CONTRACTOR ASSUMES FULL RESPONSIBILITY THEREFORE AND SHALL BEAR COSTS RESULTING FROM NONCOMPLIANCE OR VIOLATION, INCLUDING COSTS ASSOCIATED WITH REPAIRING, REPLACING OR OTHERWISE BRINGING THE WORK INTO CONFORMANCE. THE CONTRACTOR IS TO BRING TO THE ARCHITECT'S ATTENTION ANY CONDITIONS REPRESENTED IN THE CONTRACT DOCUMENTS THAT ARE NOT IN CONFORMANCE WITH APPLICABLE REQUIREMENTS.
4. THE CONTRACTOR IS TO MAINTAIN ON SITE A COPY OF THE APPLICABLE EDITION OF THE UL FIRE RESISTANCE DIRECTORY AND OTHER FIRE RESISTIVE STANDARDS REFERENCED IN THE CONTRACT DOCUMENTS FOR USE BY INSPECTORS AT TIMES OF INSPECTION.
5. CONTRACT DOCUMENTS SHALL NOT BE REPRODUCED AS THE BASIS FOR REQUIRED SUBMITTALS UNLESS PRIOR WRITTEN PERMISSION HAS BEEN OBTAINED FROM THE ARCHITECT. SUBMITTALS CONTAINING CONTRACT DOCUMENTS OR PORTIONS OF CONTRACT DOCUMENTS WILL BE REJECTED AND RETURNED TO THE CONTRACTOR WITHOUT ACTION OR COMMENT, AND ARE NOT TO BE USED FOR PROCUREMENT, FABRICATION OR INSTALLATION OF ANY WORK IN THE PROJECT.
6. WHERE WORK OR EQUIPMENT IS INDICATED AS 'NOT IN CONTRACT (NIC)' IN THE DOCUMENTS, SUCH WORK OR EQUIPMENT SHALL BE PROVIDED OUTSIDE THE CONTRACT SCOPE REPRESENTED IN THESE DOCUMENT. THE CONTRACTOR SHALL COORDINATE HIS WORK WITH NIC ITEMS AND COOPERATE TO AFFECT THE IMPLEMENTATION OF SUCH WORK OR INSTALLATION.
7. DETAILS NOT SHOWN ARE TO BE SIMILAR IN CHARACTER TO THOSE DRAWN. WHERE SPECIFIC DIMENSIONS, DETAILS OR DESIGN INTENT CANNOT BE DETER- MINED THE CONTRACTOR IS TO OBTAIN CLARIFICATION FROM THE ARCHITECT BEFORE PROCEEDING WITH THE WORK.
8. PROVIDE BLOCKING IN STUD WALLS BEHIND ITEMS SUPPORTED BY WALLS, OF SIZES, LENGTHS AND HEIGHTS AS REQUIRED. ATTACH BLOCKING TO STUDS WITH TYPE, SIZE, NUMBER AND SPACING OF ANCHORS AS REQUIRED TO PROPERLY SUPPORT LOADS OF ITEMS SUPPORTED. WHERE WOOD BLOCKING IS USED IT IS TO BE FIRE RETARDANT TREATED. WHERE METAL IS USED PROVIDE MIN 1/8 INCH THICK PLATE, WELDED, SCREWED OR BOLTED TO METAL STUD FRAMING. IF PLATES ARE NOT LOCATED COMPLETELY BEHIND ITEMS SUPPORTED, LET PLATES INTO STUDS OR OTHERWISE CONFIGURE SO THAT THERE ARE NO VISIBLE BULGES IN SURFACE OF FINISHED GYPSUM BOARD DUE TO THICKNESS OF PLATES BETWEEN STUDS AND GYPSUM BOARD.
9. TO PREVENT GALVANIC ACTION BETWEEN DISSIMILAR METALS, WHERE DISSIMILAR METALS COME INTO CONTACT WITH EACH OTHER, WHERE METALS COME INTO CONTACT WITH WOOD, CONCRETE OR MASONRY, WHERE RUNOFF FROM A METAL SURFACE FLOWS OVER A DISSIMILAR METAL, OR WHERE NON-PASSIVE METAL FASTENERS PENETRATE DISSIMILAR METALS, BREAK THE CONTACT BETWEEN MATERIALS WITH A HEAVY WATERPROOF PAPER OR FELT, A HEAVY COAT OF BITUMINOUS COATING OR AN ELASTOMERIC FILM UNLESS OTHER SEPARATOR IS INDICATED IN THE CONTRACT DOCUMENTS.
10. STEEL EXPOSED TO WATER AND/OR EXTERIOR WEATHER CONDITIONS IS TO BE GALVANIZED UNLESS INDICATED OTHERWISE. WHERE CUTTING, FASTENING, ANCHORAGE OR CONNECTION CONDITIONS RESULT IN BREAKS IN THE GALVANIZING COATING, RESTORE COATING OR APPLY ADDITIONAL COMPATIBLE PROTECTIVE COATING TO MAINTAIN INTEGRITY OF PROTECTION.
11. SHEET METAL FLASHING SHALL BE OF APPROPRIATE THICKNESS AND SIZES, AND DETAILED, CONFIGURED AND INSTALLED SO AS TO ALLOW FOR ACCEPTABLE THERMAL MOVEMENTS WITHOUT VISIBLE DISTORTIONS, LEAKS OR FAILURES OF THE FLASHING SYSTEM'S ABILITY TO PERFORM AS REQUIRED BY THE CONTRACT DOCUMENTS.
12. EDGE OF DOOR SHALL BE LOCATED 6" OFF PERPENDICULAR WALL UNLESS OTHERWISE NOTED.
13. ALL WOOD BLOCKING TO SECURE CABINETS, MARKER BOARDS, ETC. TO PARTITIONS SHALL BE FIRE RETARDANT WOOD BLOCKING.
14. CONTRACTOR SHALL VERIFY ALL DIMENSIONS AND CONDITIONS SHOWN ON THE DRAWINGS AT THE JOB SITE AND SHALL NOTIFY ARCHITECT OF ANY OMISSIONS, DISCREPANCIES, AND/OR CONFLICTS BEFORE PROCEEDING WITH THE JOB.
15. DO NOT SCALE DRAWINGS. DIMENSIONS GOVERN. LARGE SCALE DETAILS GOVERN OVER SMALL SCALE.
16. PARTITIONS SHALL BE DIMENSIONED TO FACE OF PARTITION UNLESS NOTED OTHERWISE.
17. ALL DISSIMILAR METAL MATERIALS SHALL BE ISOLATED WITH A NON-METALLIC SEPARATOR.
18. ALL MATERIALS USED IN FIRE-RATED ASSEMBLIES SHALL BE APPROVED BY U.L. OTHER RECOGNIZED STANDARD FOR USE IN SUCH ASSEMBLIES.
19. ALL BUILDING ACCESSIBILITY IS DESIGNED AND SHALL BE IN ACCORDANCE WITH I.B.C., ANSI 117.1 2003, ADAAG AND DOJ 2010 ADA STANDARDS FOR ACCESSIBLE DESIGN, WHICHEVER STANDARD PROVIDES THE GREATEST DEGREE OF ACCESSIBILITY FOR ANY GIVEN BUILDING ELEMENT.
20. EXIT DOORS SHALL BE OPERABLE FROM THE INSIDE WITHOUT THE USE OF A KEY, SPECIAL KNOWLEDGE, OR EFFORT. THE OPERATION OF THE SECURITY DEVICES SHALL BE COMPLIANT WITH THE CODES.
21. SIGNAGE INDICATING ACCESSIBLE ENTRANCES, RESTROOMS, SIGNS PLAINLY VISIBLE STATING "ELECTRICAL ROOM" AND ANY OTHER INTERIOR SIGNAGE REQUIRED BY CODE SHALL BE PROVIDED BY OWNER AND INSTALLED BY CONTRACTOR.
22. ALL EXITS SERVING A REQUIRED ACCESSIBLE SPACE, BUT NOT PROVIDING AN ACCESSIBLE MEANS OF EGRESS, SHALL PROVIDE SIGNS INDICATING THE LOCATION OF ACCESSIBLE MEANS OF EGRESS. SIGNS WILL BE BY OWNER AND INSTALLED BY CONTRACTOR.
23. SEE SHEET A-902 FOR PARTITION TYPES.
24. FOR ALL DOORS INTO ELECTRICAL CONTROL PANELS, HANDLES, PULLS, LATCHES, LOCKS, AND OTHER OPERATING DEVICES ON ACCESSIBLE DOORS SHALL HAVE A SHAPE THAT IS EASY TO GRASP WITH ONE HAND AND DOES NOT REQUIRE TIGHT GRASPING, TIGHT PINCHING, OR TWISTING OF THE WRIST TO OPERATE. LEVER- OPERATED MECHANISMS, PUSH-TYPE MECHANISMS, AND U-SHAPED HANDLES ARE ACCEPTABLE DESIGNS. WHEN SLIDING DOORS ARE FULLY OPEN, OPERATING HARDWARE SHALL BE EXPOSED AND USABLE FROM BOTH SIDES. HARDWARE REQUIRED FOR ACCESSIBLE DOOR PASSAGE SHALL BE MOUNTED NO HIGHER THAN 48" ABOVE FINISH FLOOR.
25. IF A DOOR HAS A CLOSER, THEN THE SWEEP PERIOD OF THE CLOSER SHALL BE ADJUSTED SO THAT FROM AN OPEN POSITION OF 70 DEGREES, THE DOOR WILL TAKE AT LEAST 3 SECONDS TO MOVE TO A POINT 3 INCHES FROM THE LATCH, MEASURED TO THE LEADING EDGE OF THE DOOR.
26. THE MAXIMUM FORCE FOR PUSHING OR PULLING OPEN A DOOR SHALL BE AS FOLLOWS: (1) FIRE DOORS SHALL HAVE THE MINIMUM OPENING FORCE ALLOWABLE BY THE APPROPRIATE ADMINISTRATIVE AUTHORITY. (2) OTHER DOORS. (A) INTERIOR HINGED DOORS: 5 IBF (22.2N) (B) SLIDING OR FOLDING DOORS: 5 IBF (22.2N) THESE FORCES DO NOT APPLY TO THE FORCE REQUIRED TO RETRACT LATCH BOLTS OR DISENGAGE OTHER DEVICES THAT MAY HOLD THE DOOR IN A CLOSED POSITION.
27. TACTILE SIGNAGE SHALL BE LOCATED ON THE WALL ADJACENT TO THE DOOR'S SIDE AND AT A HEIGHT OF 60 INCHES ABOVE THE FLOOR. SIGNS MAY BE LATCH PLACED ON THE NEAREST ADJACENT WALL WHEN THERE IS NO WALL SPACE ON THE LATCH SIDE.
28. EACH GLAZING UNIT SHALL BEAR THE MANUFACTURER'S LABEL DESIGNATING THE TYPE AND THICKNESS OF GLASS. GLAZING LOCATED WITHIN 24" OF A DOOR AND LESS THAN 60" ABOVE WALKING SURFACE SHALL BE SAFETY GLAZED.
29. ACCESSIBLE TOILET FACILITIES SHALL BE IDENTIFIED WITH A SIGN, PROVIDED BY OWNER AND INSTALLED BY CONTRACTOR.
30. ALL BUILDING ENTRANCES / EXITS ARE ACCESSIBLE.
31. ACCESSIBLE DOORS SHALL HAVE A LANDING ON BOTH SIDES. LANDINGS SHALL BE NO MORE THAN 1/2 INCH BELOW THE TOP OF THE DOOR THRESHOLD.
32. DOORS SHALL HAVE A SMOOTH, UNINTERRUPTED SURFACE ON THE LOWER 10 INCHES.
33. FOR CORNER GUARD LOCATIONS & INFORMATION REFERENCE THE FINISH LEGEND AND FINISH PLAN..
34. REFER TO AWI STANDARDS FOR MILLWORK CONSTRUCTION.
35. INSTALL MOISTURE RESISTANT GYP. BOARD AT ALL WALLS, INCLUDING BUT NOT LIMITED TO LAVATORY LOCATIONS.
36. CONTRACT DOCUMENTS SHALL NOT BE REPRODUCED AS THE BASIS FOR REQUIRED SUBMITTALS UNLESS PRIOR WRITTEN PERMISSION HAS BEEN OBTAINED FROM THE ARCHITECT. SUBMITTALS CONTAINING CONTRACT DOCUMENTS OR PORTIONS OF CONTRACT DOCUMENTS WILL BE REJECTED AND RETURNED TO THE CONTRACTOR WITHOUT ACTION OR COMMENT, AND ARE NOT TO BE USED FOR PROCUREMENT, FABRICATION OR INSTALLATION OF ANY WORK IN THE PROJECT.

CEILING RESTRAINT REQUIREMENTS FOR SEISMIC DESIGN CATEGORY "C":

ALL SUSPENDED CEILING SYSTEMS ARE TO BE INSTALLED PER IBC SECTION 1621 REQUIREMENTS, CISCA GUIDELINES FOR SEISMIC ZONES 0, 1 & 2, AND ASCE SECTION 7 REQUIREMENTS.

BASIC CONNECTIONS, PERIMETER, AND LATERAL SPLAY BRACING:
SUSPENDED CEILINGS GREATER THAN 144 S.F. SHALL BE BRACED IN ACCORDANCE WITH THE FOLLOWING:
1. MINIMUM INTERSECTION STRENGTH LIMITS @ MAIN TEE/CROSS TEE IS 60 LBS.
2. PROVIDE MIN. 12-GAUGE VERTICAL HANGER WIRE AT 4'-0" O.C. MIN.
3. MAIN TEE CLASSIFICATION TO BE INTERMEDIATE- OR HEAVY DUTY.
4. 1 IN 6 MAX. PLUMB OF VERTICAL HANGER WIRES REQUIRED.
5. PROVIDE MINIMUM 7/8" PERIMETER CLOSURE (MOLDING). IF MOLDING IS LESS THAN 7/8" PROVIDE NO. 12 GA. HANGER WIRES AROUND ENTIRE PERIMETER OF CEILING AT EACH TEE AT A MAX. OF 8" OFF THE WALL AND 4'-0" EACH DIRECTION AT NO MORE THAN 1-IN-6 OUT OF PLUMB; ATTACH TO WALL OR STRUCTURE ABOVE.
6. PROVIDE MIN. 3/8" GRID END TO WALL CLEARANCE.
7. GRID CONNECTION TO PERIMETER ATTACHED ON TWO ADJACENT WALLS IS NOT PERMITTED.
8. TIE PERIMETER TEE ENDS TOGETHER.
9. PARTITION ATTACHMENT IS ALLOWED ONLY OF CEILING IS ABLE TO MOVE LATERALLY.

LIGHT FIXTURE ATTACHMENT:
1. MECHANICALLY ATTACH ALL LIGHT FIXTURES TO CEILING GRID. ATTACHMENTS MUST SUPPORT 100% OF LIGHT FIXTURE WEIGHT.
2. SURFACE-MOUNTED FIXTURES DO NOT REQUIRE ATTACHMENT TO GRID.
3. SUPPORT PENDANT-HUNG FIXTURES DIRECTLY FROM STRUCTURE WITH 9-GAUGE WIRE OR APPROVED ALTERNATE.
4. FOR RIGID LAY-IN OR CAN LIGHT FIXTURES WEIGHING LESS THAN 10 LBS PROVIDE (1) WIRE TO STRUCTURE (MAY BE SLACK). FOR RIGID LAY-IN OR CAN LIGHT FIXTURES WEIGHING FROM 10 TO 56 POUNDS PROVIDE (2) VERTICAL SUPPORT WIRES (MUST BE SLACK). FOR LIGHT FIXTURES GREATER THAN 56 POUNDS PROVIDE DIRECT AND INDEPENDENT SUPPORT FROM THE BUILDING STRUCTURE.

SERVICE APPLICATIONS:
1. ALL MECHANICAL AIR TERMINALS MUST BE POSITIVELY ATTACHED TO THE CEILING GRID. FOR TERMINALS WEIGHING FROM 20 TO 56 POUNDS PROVIDE (2) VERTICAL SUPPORT WIRES (MAY BE SLACK.) FOR TERMINALS WEIGHING GREATER THAN 56 POUNDS PROVIDE DIRECT AND INDEPENDENT SUPPORT FROM THE BUILDING STRUCTURE.
2. SPRINKLER HEADS AND OTHER PENETRATIONS REQUIRE A MIN. 3/8" CLEARANCE ON ALL SIDES.
3. CABLE TRAYS AND ELECTRICAL CONDUIT DO NOT REQUIRE INDEPENDENT SUPPORT OR BRACING.

EQUIPMENT LEGEND:

- CM — COFFEE MAKER (T.F.C.I.): PROVIDE REQUIRED ELECTRICAL AND PLUMBING. COORDINATE WITH CLIENT FOR SPECIFICATION AND ADDITIONAL REQUIREMENTS.
- REF — REFRIGERATOR (T.F.C.I.): PROVIDE ELECTRICAL DUPLEX RECEPTACLE. COORDINATE WITH CLIENT FOR SPECIFICATION AND ADDITIONAL REQUIREMENTS.
- IM — ICE MAKER (T.F.C.I.): PROVIDE REQUIRED ELECTRICAL AND PLUMBING. COORDINATE WITH CLIENT FOR SPECIFICATION AND ADDITIONAL REQUIREMENTS.
- MW — MICROWAVE (T.F.T.I.): PROVIDE REQUIRED ELECTRICAL. COORDINATE WITH CLIENT FOR SPECIFICATION AND ADDITIONAL REQUIREMENTS.
- VEND — VENDING - SNACK (T.F.C.I.): PROVIDE REQUIRED ELECTRICAL. COORDINATE WITH CLIENT FOR SPECIFICATION AND ADDITIONAL REQUIREMENTS.

REFLECTED CEILING SYMBOLS LEGEND:

- NEW 2'x2' CEILING GRID AND TILE , SEE FINISH LEGEND
- NEW GYPSUM BOARD CEILING
- 2'x2' FLUORESCENT LIGHT FIXTURE
- 2'x4' FLUORESCENT LIGHT FIXTURE
- RECESSED CAN LIGHT FIXTURE
- LINEAR PENDANT FIXTURE
- DECORATIVE PENDANT FIXTURE
- SUPPLY DIFFUSER
- RETURN DIFFUSER
- EXIT SIGN

Scenic Regional Library — read, explore, grow

SCENIC REGIONAL LIBRARY
WRIGHT CITY BRANCH
60 WILDCAT DRIVE
WRIGHT CITY, MO 63390

JEMA — planning architecture interior design
SDA ARCHITECTS

ARCHITECT-OF-RECORD
JEMA
3005 LOCUST ST.
ST. LOUIS, MO 63103
T (314) 531-7400
CONTACT: SCOTT CLARK
E-MAIL: SCLARK@JEMASTL.COM

DESIGN ARCHITECT
SAPP DESIGN ASSOCIATES ARCHITECTS
3750 SOUTH FREMONT
SPRINGFIELD, MO 65804
T (417) 877-9600
F (417) 877-9696
CONTACT: JAMES STUFFLEBEAM
E: STUFFLEBEAM@SDAARCHITECTS.COM

CIVIL
COCHRAN
530A E. INDEPENDENCE DRIVE
UNION, MO 63084
CONTACT: DAVE VAN LEER
T (636) 584-0540
F (636) 584-0512
E-MAIL: DVANLEER@COCHRAN.COM

STRUCTURAL
ALPER AUDI, INC.
1804 BORMAN CIRCLE DRIVE
ST. LOUIS, MO 63146
T (314) 432-8600
F (314) 807-2774
CONTACT: STEVE EHRETT
E-MAIL: STEVE.EHRETT@ALPERAUDI.COM

MECHANICAL, ELECTRICAL, PLUMBING
BRiC PARTNERSHIP, LLC
343 S. KIRKWOOD ROAD, SUITE 204
KIRKWOOD, MO 63122
T (314) 725-5889
CONTACT: BRUCE COLEMAN
E: BCOLEMAN@BRICPARTNERSHIP.COM

ARCHITECT OF RECORD:

JOHN EDWARD MUELLER
MO ARCHITECTURAL LICENSE A2010039554
MO CERTIFICATE OF AUTHORITY A2014008380

No.	Date	Description
	06/13/17	ISSUED FOR RE-BID

DRAWN BY: **SC/SH**

PROJECT NUMBER: **16-1161.03**

SHEET TITLE:
SYMBOLS AND ABBREVIATIONS

A-001

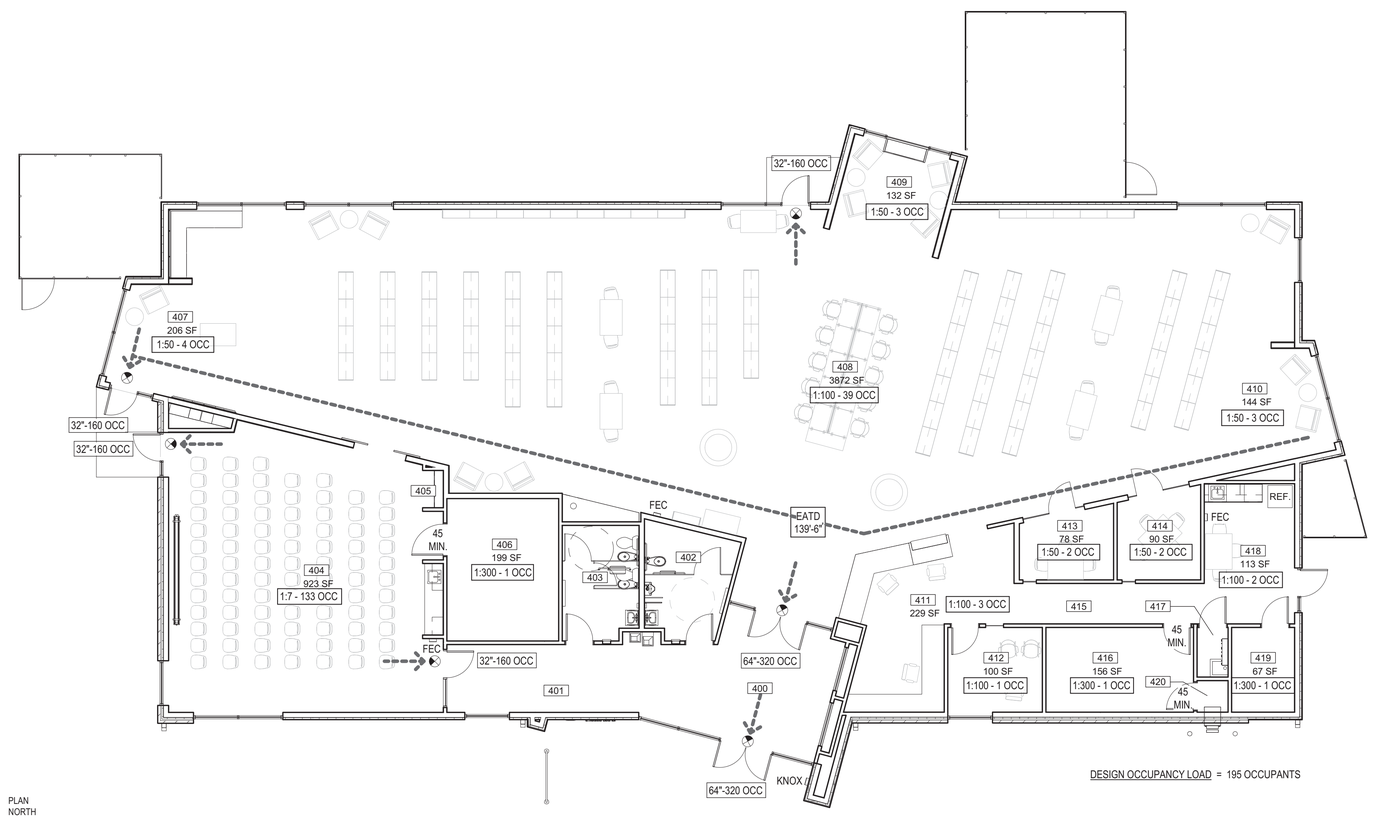

DESIGN OCCUPANCY LOAD = 195 OCCUPANTS

PLAN NORTH

1 / A-002 LIFE SAFETY PLAN
1/8" = 1'-0"

CODE INFORMATION

AUTHORITIES HAVING JURISDICTION:	CITY OF WRIGHT CITY, MO (WARREN COUNTY) WRIGHT CITY FIRE PROTECTION DISTRICT
BUILDING CODE:	INTERNATIONAL BUILDING CODE (IBC) 2009 EDITION
ACCESSIBILITY:	AMERICANS WITH DISABILITIES ACT ICC/ANSI A117.1, REFERENCED BY BUILDING CODE
FIRE PREVENTION:	INTERNATIONAL FIRE CODE (IFC) 2009 EDITION
MECHANICAL:	INTERNATIONAL MECHANICAL CODE (IMC) 2009 EDITION
ELECTRICAL:	NATIONAL ELECTRICAL CODE, 2008 EDITION, WITH CITY ADDITIONS.
PLUMBING:	INTERNATIONAL PLUMBING CODE (IPC) 2009 EDITION
PROPERTY MAINTENANCE:	INTERNATIONAL PROPERTY MAINTENANCE CODE (IPMC) 2009 EDITION.

BUILDING INFORMATION

USE GROUPS
A-3 ASSEMBLY, LIBRARY
S-1 MODERATE HAZARD STORAGE (ACCESSORY USE, SEE LIFE SAFETY PLAN, SHEET A-002)

CONSTRUCTION TYPE:
TYPE IIB NON-SPRINKLERED, NOT PROTECTED

SEISMIC CATEGORY:
C REFER TO CISCA GUIDELINES FOR REQUIREMENTS

AREA:

FLOOR:	ACTUAL GSF	DESIGN OCCUPANCY:
FIRST FLOOR	7,695 SF	195 OCCUPANTS

ALLOWABLE HEIGHT AND AREA:
USE GROUP A-3 IS MOST RESTRICTIVE USE.
ALLOWABLE HEIGHT AND AREA, IBC TABLE 503 - 2 STORIES AND 9,500 SF.

FIRE RESISTANCE RATINGS -HOURS:

BUILDING ELEMENT TYPE	TYPE IIB
STRUCTURAL FRAME, COLUMNS, GIRDERS & TRUSSES	0
BEARING WALLS - EXTERIOR / INTERIOR	0
NON-BEARING WALLS & PARTITIONS -INTERIOR	0
FLOOR CONSTRUCTION INCLUDING BEAMS & JOIST	0
ROOF CONSTRUCTION INCLUDING BEAMS & JOIST	0

EXIT CAPACITY
THE EXIT CAPACITY FOR EACH FLOOR AREA MUST BE SUFFICIENT FOR THE OCCUPANT LOAD AS CALCULATED. EXIT CAPACITY IS DETERMINED BY DIVIDING THE CLEAR WIDTH OF EACH EXIT COMPONENT BY THE APPROPRIATE FACTOR NOTED BELOW

DOORS/AISLES - 0.20" PER OCCUPANT

IBC OCCUPANCY CALCULATIONS:

OCCUPANCY TYPE:	AREA PER OCCUPANT
GENERAL LIBRARY STACK AREA	100 SF
READING ROOMS	50 SF
MEETING ROOM(S) (CONCENTRATED CHAIRS ONLY)	7 SF

SECTION 903 AUTOMATIC SPRINKLER SYSTEM:

903.2.1.3 GROUP A-3, NONE OF THE (3) CONDITIONS PERTAIN TO THE PROJECT THEREFORE AN AUTOMATIC SPRINKLER SYSTEM IS NOT REQUIRED.

SECTION 903.2.1.3 GROUP A-3 AN AUTOMATIC SPRINKLER SYSTEM SHALL BE PROVIDED FOR GROUP A-3 OCCUPANCIES WHERE ONE OF THE FOLLOWING CONDITIONS EXISTS:
1. THE FIRE AREA EXCEEDS 12,000 SQUARE FEET (1115 M2);
2. THE FIRE AREA HAS AN OCCUPANT LOAD OF 300 OR MORE;
OR
3. THE FIRE AREA IS LOCATED ON A FLOOR OTHER THAN A LEVEL OF EXIT DISCHARGE SERVING SUCH OCCUPANCIES.

SECTION 1016.1 EXIT ACCESS TRAVEL DISTANCE:

FOR NON-SPRINKLERED ASSEMBLY USE GROUP THE MAXIMUM EXIT ACCESS TRAVEL DISTANCE IS 200'.

RATINGS

ELEMENT:	RATING:
COLUMN	0 HOUR
CORRIDOR	0 MINUTE
DOOR	0 MINUTE
FLOOR	0 HOUR
STORAGE	0 HOUR

SYMBOL LEGEND

	1-HOUR RATED WALL PARTITION
KNOX	RECESSED KNOX BOX CABINET
FEC	SEMI-RECESSED FIRE EXTINGUISHER CABINET
	EGRESS PATH
X:X - X OCC	XOCC= AREA PER OCCUPANCY LOAD
XX" - X OCC	XX= CLEAR OPENING IN INCHES AND EGRESS CAPACITY
EATD X'-X"	EXIT ACCESS TRAVEL DISTANCE, MAX. CONDITION/WORST CASE INDICATED
	EXIT SIGN
	DIRECTION/LOCATION OF EGRESS

ROOM SCHEDULE

Number	Name
400	VESTIBULE
401	CORRIDOR
402	MENS
403	WOMENS
404	MEETING ROOM
405	COATS
406	STORAGE
407	CHILDREN AREA
408	CIRCULATION
409	ADULT AREA
410	TEEN AREA
411	WORK ROOM
412	OFFICE
413	STUDY
414	STUDY
415	CORRIDOR
416	STORAGE
417	JANITORS CLOSET
418	BREAK ROOM
419	MECH / ELEC
420	BOOK DROP

Scenic Regional Library
read, explore, grow

SCENIC REGIONAL LIBRARY
WRIGHT CITY BRANCH
60 WILDCAT DRIVE
WRIGHT CITY, MO 63390

JEMA
SDA ARCHITECTS

ARCHITECT-OF-RECORD
JEMA
3005 LOCUST ST.
ST. LOUIS, MO 63103
T (314) 531-7400
CONTACT: SCOTT CLARK
E-MAIL: SCLARK@JEMASTL.COM

DESIGN ARCHITECT
SAPP DESIGN ASSOCIATES ARCHITECTS
3750 SOUTH FREMONT
SPRINGFIELD, MO 65804
T (417) 877-9600
F (417) 877-9696
CONTACT: JAMES STUFFLEBEAM
E: STUFFLEBEAM@SDAARCHITECTS.COM

CIVIL
COCHRAN
530A E. INDEPENDENCE DRIVE
UNION, MO 63084
CONTACT: DAVE VAN LEER
T (636) 584-0540
F (636) 584-0512
E-MAIL: DVANLEER@COCHRAN.COM

STRUCTURAL
ALPER AUDI, INC.
1804 BORMAN CIRCLE DRIVE
ST. LOUIS, MO 63146
T (314) 432-8600
F (314) 807-2774
CONTACT: STEVE EHRETT
E-MAIL: STEVE.EHRETT@ALPERAUDI.COM

MECHANICAL, ELECTRICAL, PLUMBING
BRIC PARTNERSHIP, LLC
343 S. KIRKWOOD ROAD, SUITE 204
KIRKWOOD, MO 63122
T (314) 725-5889
CONTACT: BRUCE COLEMAN
E: BCOLEMAN@BRICPARTNERSHIP.COM

ARCHITECT OF RECORD:

JOHN EDWARD MUELLER
MO ARCHITECTURAL LICENSE A2010039554
MO CERTIFICATE OF AUTHORITY A2014008380

No.	Date	Description
	06/13/17	ISSUED FOR RE-BID

DRAWN BY: **SC/SH**

PROJECT NUMBER: **16-1161.03**

SHEET TITLE:
LIFE SAFETY PLAN

A-002

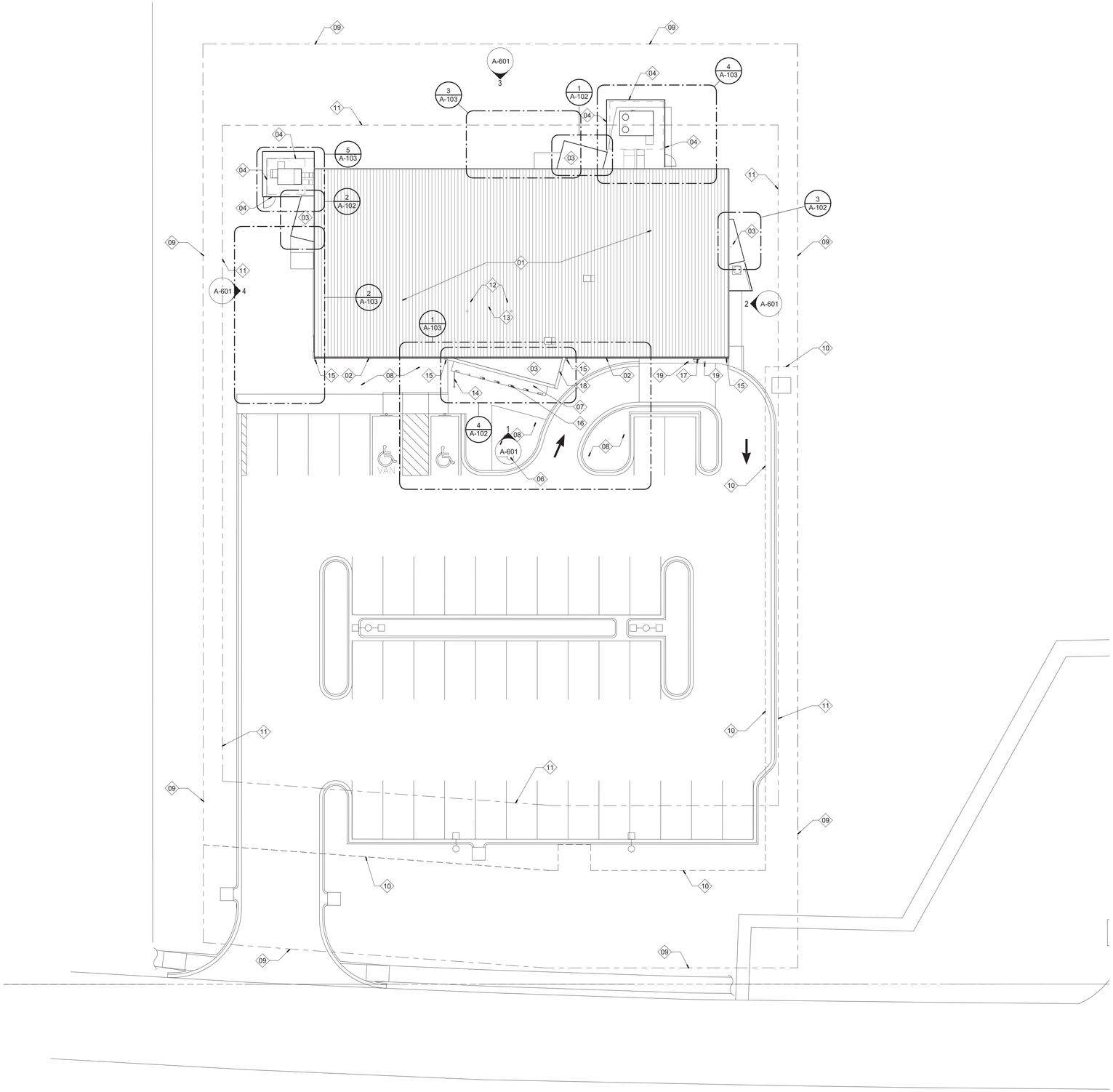

NORTH

1 / A-101 SITE PLAN - ARCHITECTURAL
1/16" = 1'-0"

KEYED NOTES - SITE PLAN	
Keynote Number	Description
01	DECOR' SIMULATED METAL ROOF, MEMBRANE ROOF SYSTEM, REFER TO SPECS.
02	PRE-FINISHED GUTTER, REFER TO SPECS.
03	ROOFING MEMBRANE, REFER TO SPECS.
04	MECHANICAL SCREEN FENCING - REFER TO SPECIFICATIONS AND DETAILS
05	NOT USED
06	SINGLE FLAGPOLE, REFER TO SPECS.
07	PRE-FINISHED COMPOSITE METAL PANEL CANOPY, REFER TO SPECS. ROOF MEMBRANE ON TOP SURFACE.
08	PLANTING AREA, REFER TO LANDSCAPE PLAN.
09	PROPERTY LINE
10	EASEMENT
11	BUILDING SETBACK LINE
12	EXHAUST FAN PIPING PENETRATION, SEE ROOF DETAIL.
13	PLUMBING EXHAUST PIPING PENETRATION, SEE ROOF DETAIL.
14	SURFACE MOUNTED BIKE RACK, REFER TO SPECS.
15	DOWN SPOUT LOCATION - REFER TO CIVIL DWGS. FOR TIE-IN INFORMATION.
16	BUILDING SIGNAGE - REFER TO SPECS. FOR MORE INFORMATION
17	THROUGH WALL BOOK DROP UNIT, REFER TO SPECS. AND ALTERNATES.
18	WALL SCUPPE AND DOWN SPOUT, REFER TO ENLARGED ROOF PLAN FOR MORE INFORMATION.
19	TRAFFIC BOLLARD, REFER TO CIVIL DRAWINGS.

Scenic Regional Library
read, explore, grow

SCENIC REGIONAL LIBRARY
WRIGHT CITY BRANCH
60 WILDCAT DRIVE
WRIGHT CITY, MO 63390

JEMA
SDA ARCHITECTS

ARCHITECT-OF-RECORD
JEMA
3005 LOCUST ST.
ST. LOUIS, MO 63103
T (314) 531-7400
CONTACT: SCOTT CLARK
E-MAIL: SCLARK@JEMASTL.COM

DESIGN ARCHITECT
SAPP DESIGN ASSOCIATES ARCHITECTS
3750 SOUTH FREMONT
SPRINGFIELD, MO 65804
T (417) 877-9600
F (417) 877-9696
CONTACT: JAMES STUFFLEBEAM
E: STUFFLEBEAM@SDAARCHITECTS.COM

CIVIL
COCHRAN
530A E. INDEPENDENCE DRIVE
UNION, MO 63084
CONTACT: DAVE VAN LEER
T (636) 584-0540
F (636) 584-0512
E-MAIL: DVANLEER@COCHRAN.COM

STRUCTURAL
ALPER AUDI, INC.
1804 BORMAN CIRCLE DRIVE
ST. LOUIS, MO 63146
T (314) 432-8600
F (314) 807-2774
CONTACT: STEVE EHRETT
E-MAIL: STEVE.EHRETT@ALPERAUDI.COM

MECHANICAL, ELECTRICAL, PLUMBING
BRIC PARTNERSHIP, LLC
343 S. KIRKWOOD ROAD, SUITE 204
KIRKWOOD, MO 63122
T (314) 725-5889
CONTACT: BRUCE COLEMAN
E: BCOLEMAN@BRICPARTNERSHIP.COM

ARCHITECT OF RECORD:

JOHN EDWARD MUELLER
MO ARCHITECTURAL LICENSE A2010039554
MO CERTIFICATE OF AUTHORITY A2014008380

No.	Date	Description
	06/13/17	ISSUED FOR RE-BID

DRAWN BY: **SC/SH**

PROJECT NUMBER: **16-1161.03**

SHEET TITLE:
ARCHITECTURAL SITE PLAN

A-101

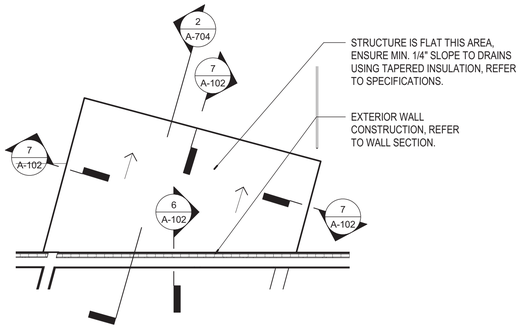

1 A-102 ENLARGED PLAN @ ADULTS ROOF
1/4" = 1'-0"

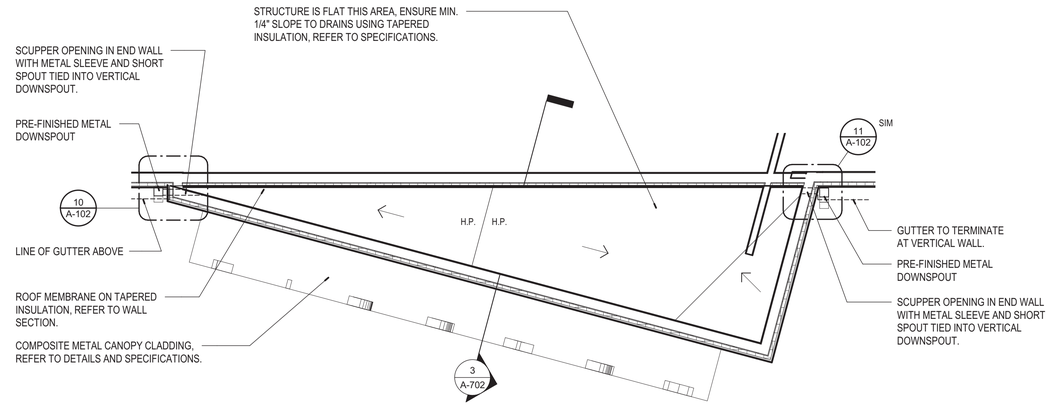

4 A-102 ENLARGED PLAN @ ENTRY ROOF
1/4" = 1'-0"

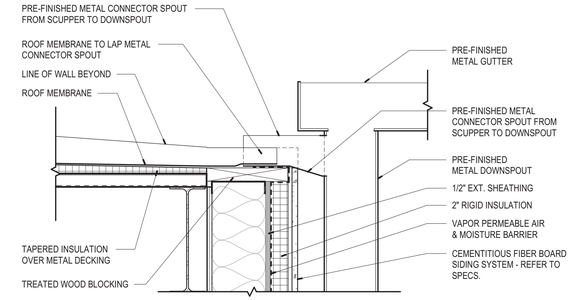

9 A-102 DETAIL @ LOW END OF ENTRY ROOF
1 1/2" = 1'-0"

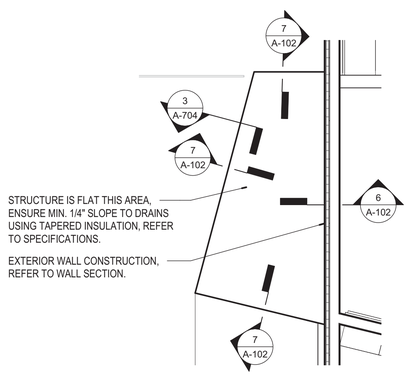

2 A-102 ENLARGED PLAN @ CHILDREN'S ROOF
1/4" = 1'-0"

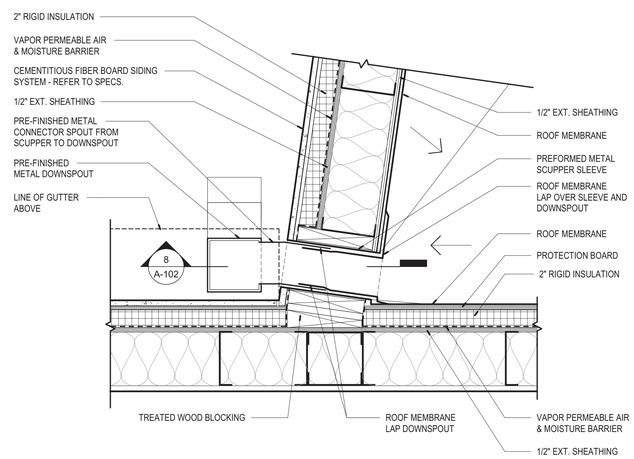

11 A-102 DETAIL @ HIGH ENTRY END
1 1/2" = 1'-0"

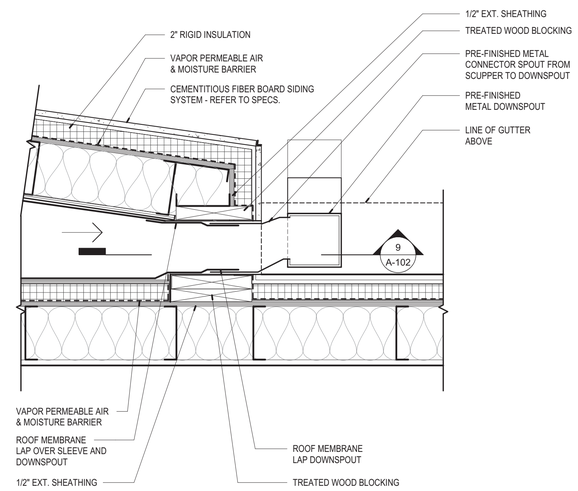

10 A-102 DETAIL @ LOW ENTRY END
1 1/2" = 1'-0"

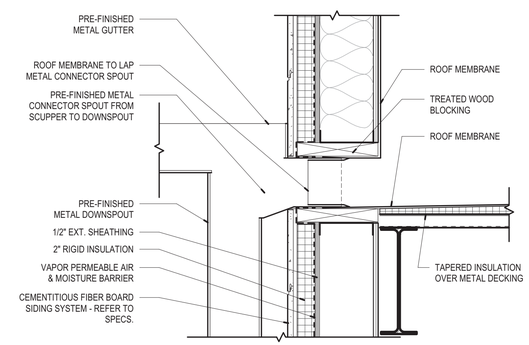

8 A-102 DETAIL @ HIGN END OF ENTRY ROOF
1 1/2" = 1'-0"

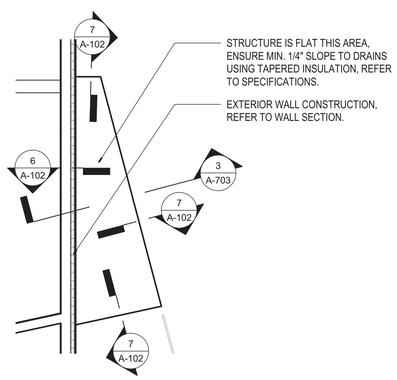

3 A-102 ENLARGED PLAN @ TEENS ROOF
1/4" = 1'-0"

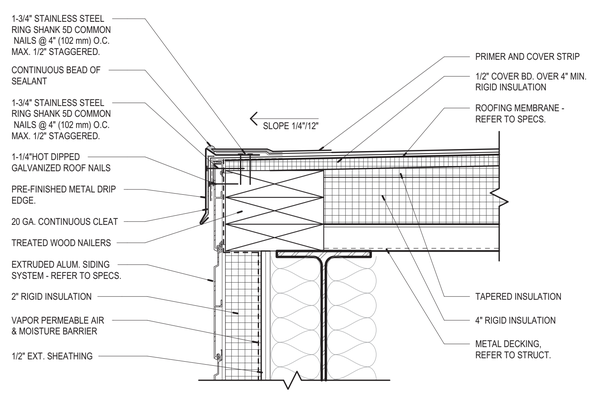

7 A-102 DETAIL @ ROOF DRIP EDGE
3" = 1'-0"

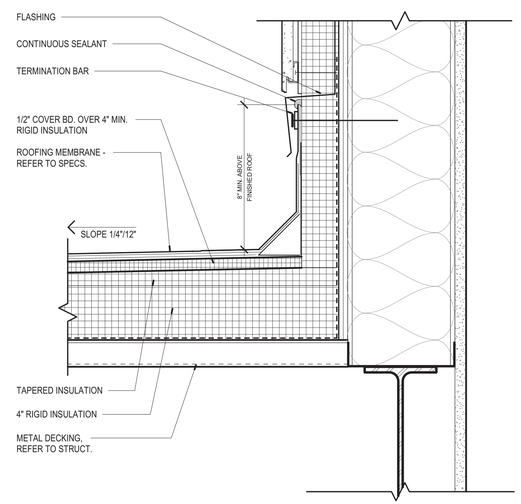

6 A-102 DETAIL @ ROOF VERT. WALL
3" = 1'-0"

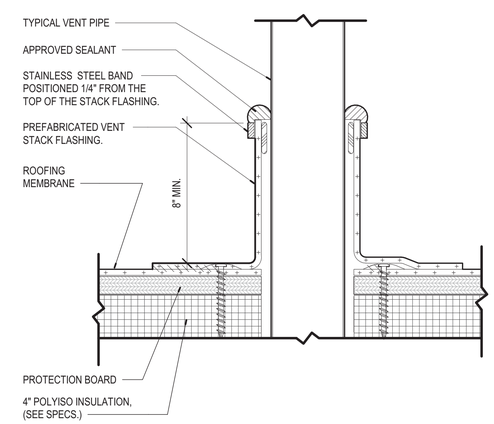

5 A-102 DETAIL @ ROUND PENETRATION
1" = 1'-0"

Scenic Regional Library
read, explore, grow

SCENIC REGIONAL LIBRARY
WRIGHT CITY BRANCH
60 WILDCAT DRIVE
WRIGHT CITY, MO 63390

JEMA
SDA ARCHITECTS

ARCHITECT-OF-RECORD
JEMA
3005 LOCUST ST.
ST. LOUIS, MO 63103
T (314) 531-7400
CONTACT: SCOTT CLARK
E-MAIL: SCLARK@JEMASTL.COM

DESIGN ARCHITECT
SAPP DESIGN ASSOCIATES ARCHITECTS
3750 SOUTH FREMONT
SPRINGFIELD, MO 65804
T (417) 877-9600
F (417) 877-9696
CONTACT: JAMES STUFFLEBEAM
E: STUFFLEBEAM@SDAARCHITECTS.COM

CIVIL
COCHRAN
530A E. INDEPENDENCE DRIVE
UNION, MO 63084
CONTACT: DAVE VAN LEER
T (636) 584-0540
F (636) 584-0512
E-MAIL: DVANLEER@COCHRAN.COM

STRUCTURAL
ALPER AUDI, INC.
1804 BORMAN CIRCLE DRIVE
ST. LOUIS, MO 63146
T (314) 432-8600
F (314) 807-2774
CONTACT: STEVE EHRETT
E-MAIL: STEVE.EHRETT@ALPERAUDI.COM

MECHANICAL, ELECTRICAL, PLUMBING
BRIC PARTNERSHIP, LLC
343 S. KIRKWOOD ROAD, SUITE 204
KIRKWOOD, MO 63122
T (314) 725-5889
CONTACT: BRUCE COLEMAN
E: BCOLEMAN@BRICPARTNERSHIP.COM

ARCHITECT OF RECORD:

JOHN EDWARD MUELLER
MO ARCHITECTURAL LICENSE A2010039554
MO CERTIFICATE OF AUTHORITY A2014008380

No.	Date	Description
	06/13/17	ISSUED FOR RE-BID

DRAWN BY: **SC/SH**

PROJECT NUMBER: **16-1161.03**

SHEET TITLE:
ENLARGED ROOF PLANS AND ROOF DETAILS

A-102

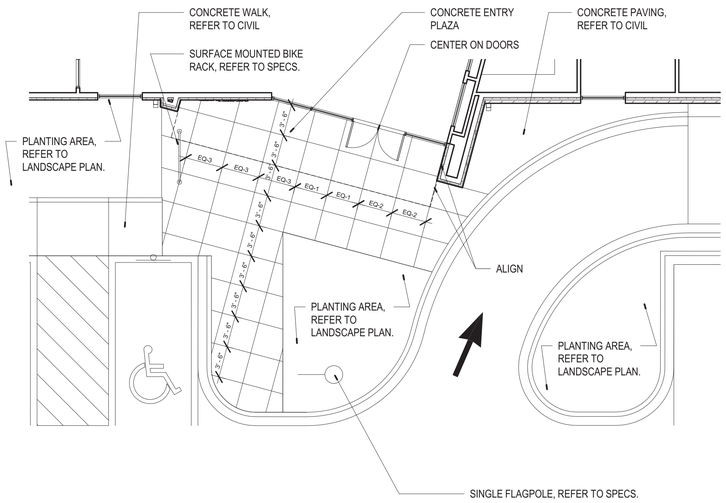

1 A-103 ENLARGED PLAN @ ENTRY PLAZA
1/8" = 1'-0"

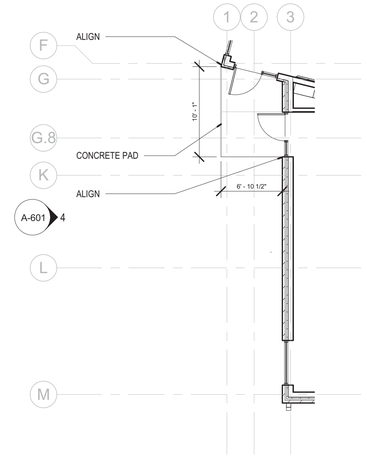

2 A-103 ENLARGED PLAN @ MEETING ROOM PATIO
1/8" = 1'-0"

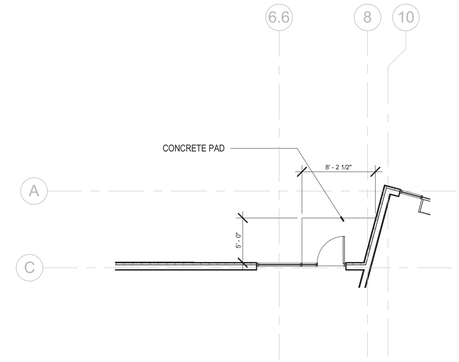

3 A-103 ENLARGED PLAN @ ADULT AREA PATIO
1/8" = 1'-0"

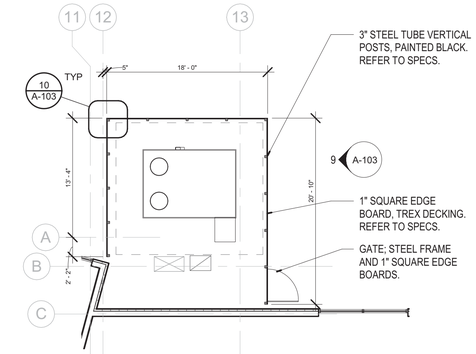

4 A-103 ENLARGED PLAN @ MECHANICAL SCREEN
1/8" = 1'-0"

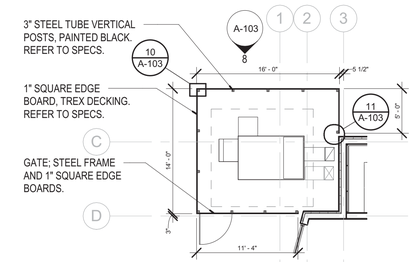

5 A-103 ENLARGED PLAN @ MECHANICAL SCREEN
1/8" = 1'-0"

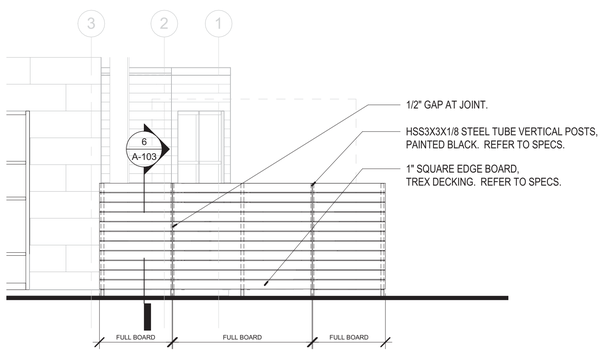

8 A-103 MECHANICAL SCREEN
1/4" = 1'-0"

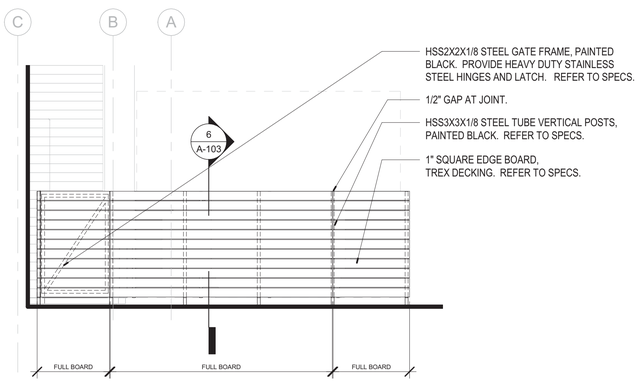

9 A-103 MECHANICAL SCREEN
1/4" = 1'-0"

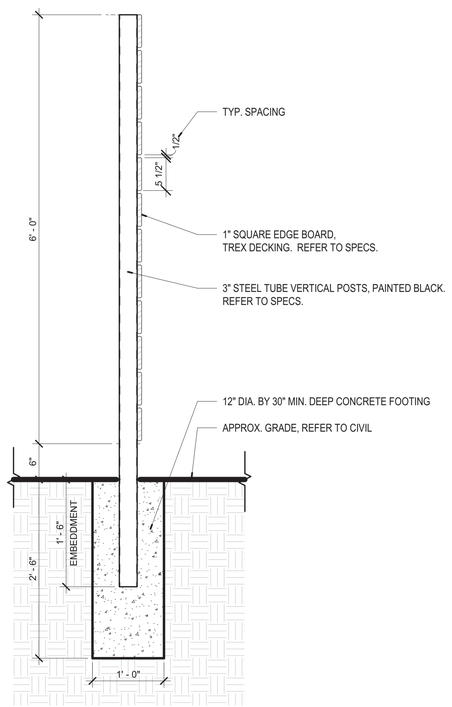

6 A-103 DETAIL - MECH SCREEN/FENCE SECTION
1" = 1'-0"

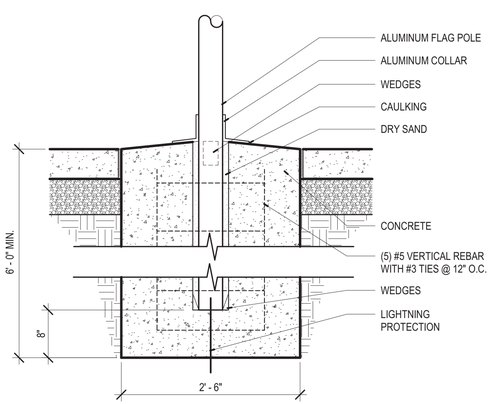

7 A-103 FLAG POLE DETAIL
1" = 1'-0"

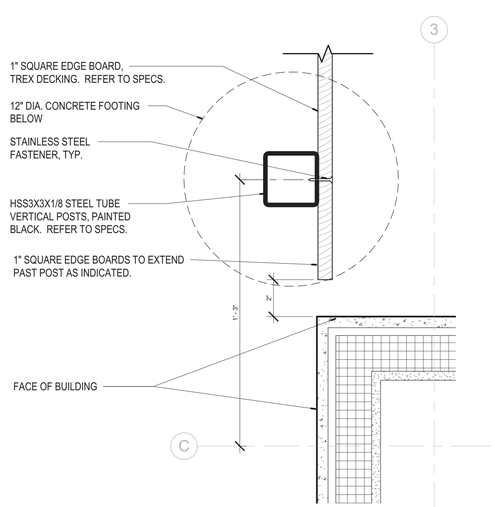

11 A-103 DETAIL @ MECHANICAL SCREEN END POST
3" = 1'-0"

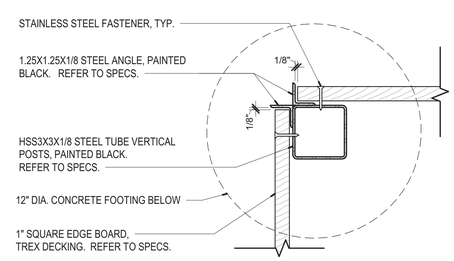

10 A-103 DETAIL @ MECHANICAL SCREEN CORNER POST
3" = 1'-0"

Scenic Regional Library
read, explore, grow

SCENIC REGIONAL LIBRARY
WRIGHT CITY BRANCH
60 WILDCAT DRIVE
WRIGHT CITY, MO 63390

JEMA
SDA ARCHITECTS

ARCHITECT-OF-RECORD
JEMA
3005 LOCUST ST.
ST. LOUIS, MO 63103
T (314) 531-7400
CONTACT: SCOTT CLARK
E-MAIL: SCLARK@JEMASTL.COM

DESIGN ARCHITECT
SAPP DESIGN ASSOCIATES ARCHITECTS
3750 SOUTH FREMONT
SPRINGFIELD, MO 65804
T (417) 877-9600
F (417) 877-9696
CONTACT: JAMES STUFFLEBEAM
E: STUFFLEBEAM@SDAARCHITECTS.COM

CIVIL
COCHRAN
530A E. INDEPENDENCE DRIVE
UNION, MO 63084
CONTACT: DAVE VAN LEER
T (636) 584-0540
F (636) 584-0512
E-MAIL: DVANLEER@COCHRAN.COM

STRUCTURAL
ALPER AUDI, INC.
1804 BORMAN CIRCLE DRIVE
ST. LOUIS, MO 63146
T (314) 432-8600
F (314) 807-2774
CONTACT: STEVE EHRETT
E-MAIL: STEVE.EHRETT@ALPERAUDI.COM

MECHANICAL, ELECTRICAL, PLUMBING
BRIC PARTNERSHIP, LLC
343 S. KIRKWOOD ROAD, SUITE 204
KIRKWOOD, MO 63122
T (314) 725-5889
CONTACT: BRUCE COLEMAN
E: BCOLEMAN@BRICPARTNERSHIP.COM

ARCHITECT OF RECORD:

JOHN EDWARD MUELLER
MO ARCHITECTURAL LICENSE A2010039554
MO CERTIFICATE OF AUTHORITY A2014008380

No.	Date	Description
	06/13/17	ISSUED FOR RE-BID

DRAWN BY: **SC/SH**

PROJECT NUMBER: **16-1161.03**

SHEET TITLE:
SITE DETAILS

A-103

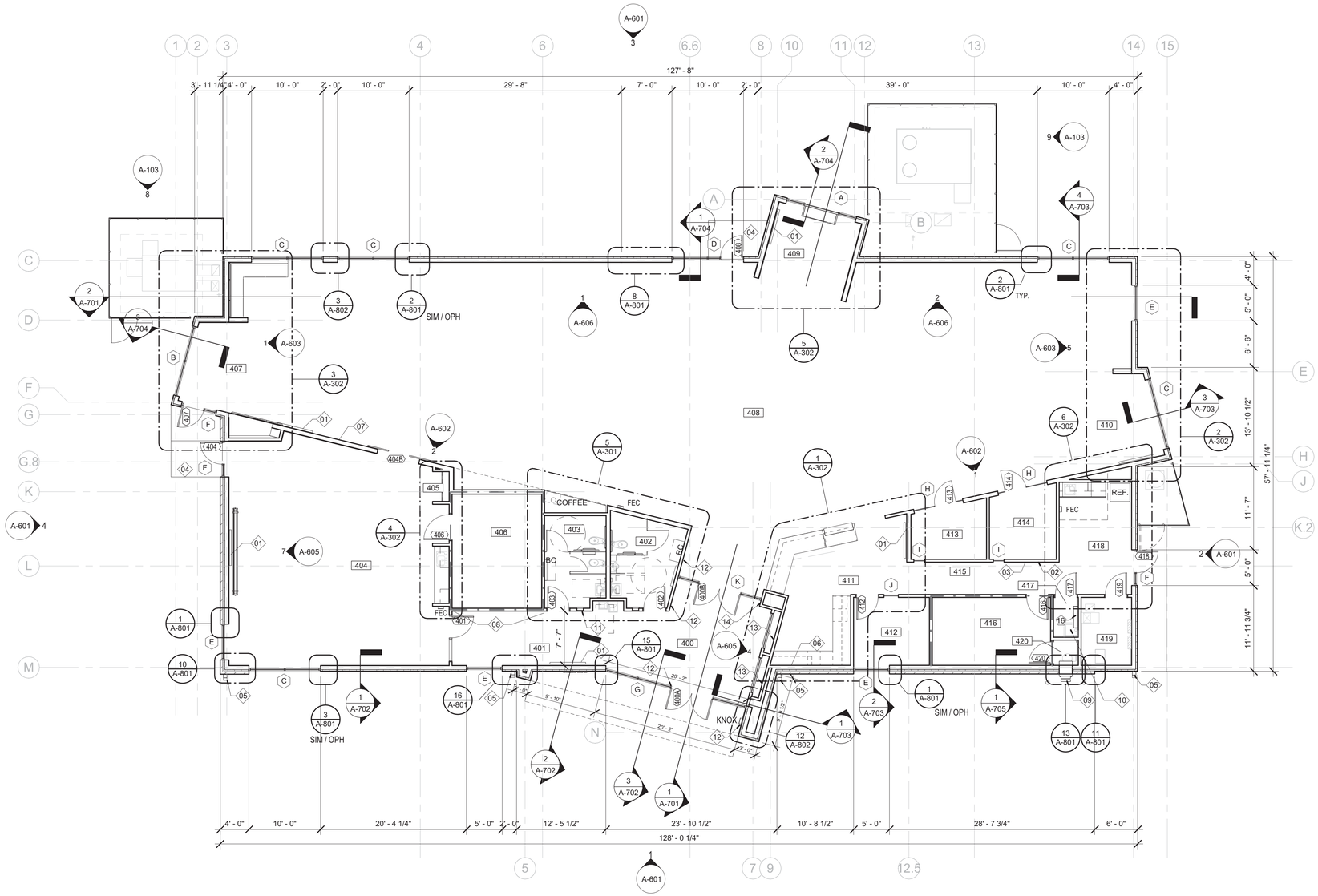

PLAN NORTH

1 A-201 FLOOR PLAN
1/8" = 1'-0"

GENERAL NOTES - FLOOR PLAN

1. REFER TO SHEET A-001 FOR FLOOR PLAN GENERAL NOTES

KEYED NOTES - FLOOR PLAN	
01	PROVIDE BLOCKING IN WALL FOR WALL-MOUNTED DISPLAY.
02	PROVIDE BLOCKING IN WALL FOR COAT HOOKS.
03	PROVIDE BLOCKING IN WALL FOR LOCKERS.
04	CONCRETE PAD.
05	DOWN SPOUT LOCATION - REFER TO ARCHITECTURAL SITE PLAN AND CIVIL DWGS.
06	PROVIDE BLOCKING IN WALL FOR WALL-HUNG SHELVING.
07	PROVIDE BLOCKING IN WALL FOR BULLETIN BOARD, C.F.C.I.
08	PROVIDE BLOCKING IN WALL FOR DONOR WALL, O.F.O.I.
09	IN-WALL BOOK DROP UNIT, REFER TO DETAILS AND SPECIFICATIONS.
10	JANITOR'S MOP SINK, REFER TO PLUMBING DRAWINGS AND SPECIFICATIONS.
11	PROVIDE BLOCKING IN WALL FOR SLATWALL INSTALLATION.
12	LOCATION OF ADA DOOR OPERATOR, REFER TO DOOR HDWR. AND ELECTRICAL DRAWINGS.
13	PROVIDE BLOCKING IN WALL FOR SLATWALL INSTALLATION.
14	SURFACE APPLIED SELF-CONTAINED DOOR COUNTER DEVICE TO BE RELOCATED FROM EXISTING FACILITY, NO POWER OR DATA CONNECTION REQUIRED. COORDINATE WITH OWNER, O.F.C.I.

ROOM SCHEDULE	
Number	Name
400	VESTIBULE
401	CORRIDOR
402	MENS
403	WOMENS
404	MEETING ROOM
405	COATS
406	STORAGE
407	CHILDREN AREA
408	CIRCULATION
409	ADULT AREA
410	TEEN AREA
411	WORK ROOM
412	OFFICE
413	STUDY
414	STUDY
415	CORRIDOR
416	STORAGE
417	JANITORS CLOSET
418	BREAK ROOM
419	MECH / ELEC
420	BOOK DROP

Scenic Regional Library
read, explore, grow

SCENIC REGIONAL LIBRARY
WRIGHT CITY BRANCH
60 WILDCAT DRIVE
WRIGHT CITY, MO 63390

JEMA
SDA ARCHITECTS

ARCHITECT-OF-RECORD
JEMA
3005 LOCUST ST.
ST. LOUIS, MO 63103
T (314) 531-7400
CONTACT: SCOTT CLARK
E-MAIL: SCLARK@JEMASTL.COM

DESIGN ARCHITECT
SAPP DESIGN ASSOCIATES ARCHITECTS
3750 SOUTH FREMONT
SPRINGFIELD, MO 65804
T (417) 877-9600
F (417) 877-9696
CONTACT: JAMES STUFFLEBEAM
E: STUFFLEBEAM@SDAARCHITECTS.COM

CIVIL
COCHRAN
530A E. INDEPENDENCE DRIVE
UNION, MO 63084
CONTACT: DAVE VAN LEER
T (636) 584-0540
F (636) 584-0512
E-MAIL: DVANLEER@COCHRAN.COM

STRUCTURAL
ALPER AUDI, INC.
1804 BORMAN CIRCLE DRIVE
ST. LOUIS, MO 63146
T (314) 432-8600
F (314) 807-2774
CONTACT: STEVE EHRETT
E-MAIL: STEVE.EHRETT@ALPERAUDI.COM

MECHANICAL, ELECTRICAL, PLUMBING
BRIC PARTNERSHIP, LLC
343 S. KIRKWOOD ROAD, SUITE 204
KIRKWOOD, MO 63122
T (314) 725-5889
CONTACT: BRUCE COLEMAN
E: BCOLEMAN@BRICPARTNERSHIP.COM

ARCHITECT OF RECORD:

JOHN EDWARD MUELLER
MO ARCHITECTURAL LICENSE A2010039554
MO CERTIFICATE OF AUTHORITY A2014008380

No.	Date	Description
	06/13/17	ISSUED FOR RE-BID

DRAWN BY: **SC/SH**

PROJECT NUMBER: **16-1161.03**

SHEET TITLE:
FLOOR PLAN - FIRST FLOOR

A-201

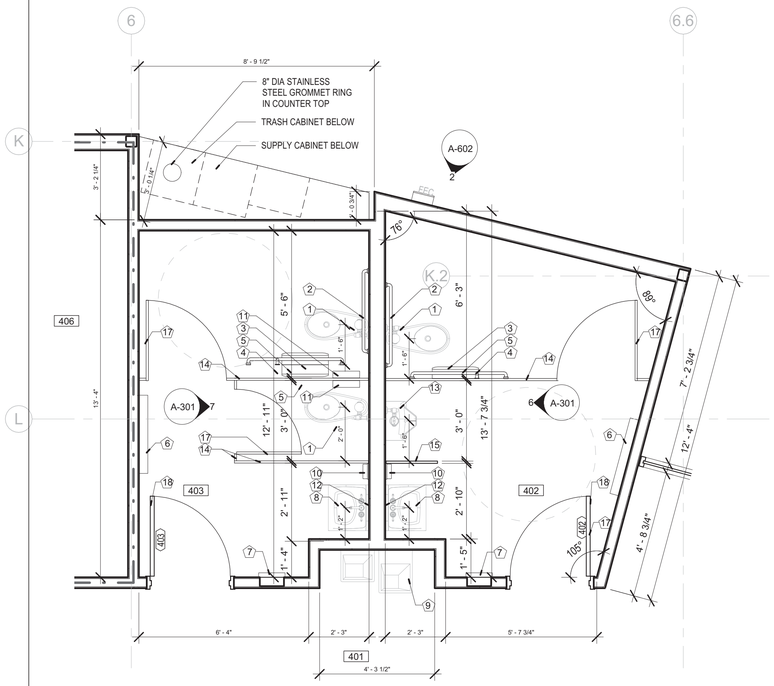

5 A-301 ENLARGED PLAN @ RESTROOMS & COFFEE BAR
3/8" = 1'-0"

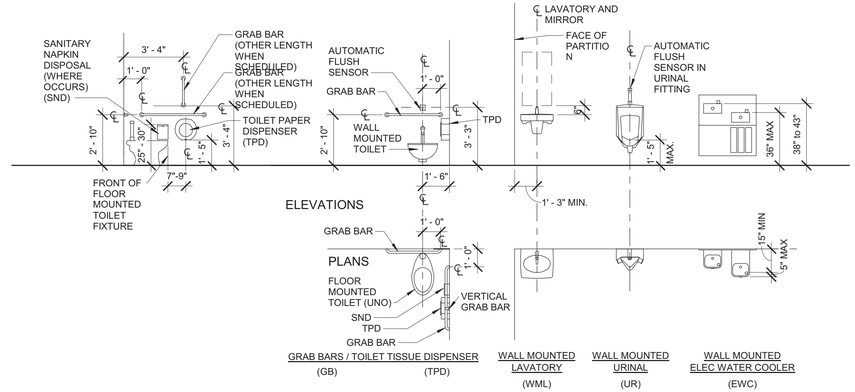

TOILET FIXTURE AND ACCESSORY MOUNTING LOCATIONS
DIMENSIONS SHOWN APPLY TO SPECIFIC MODELS ONLY. ADJUST DIMENSIONS AS REQUIRED FOR OTHER MODELS AND/OR MANUFACTURERS.

MOUNTING LOCATIONS - PLUMBING FIXTURES
1/4" = 1'-0"

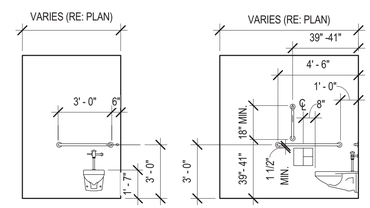

MOUNTING LOCATIONS - PLUMBING FIXTURES - ADA WC
1/4" = 1'-0"

NOTES:
1. ALL FIXTURES TO COMPLY WITH AND BE INSTALLED IN COMPLIANCE WITH ALL APPLICABLE A.D.A., ANSI, AND BUILDING CODE REQUIREMENTS.
2. PROVIDE BLOCKING FOR LAVATORY AND GRAB BARS.
3. ALL DIMENSIONS SHOWN ARE MINIMUM U.N.O.
4. DASHED LINES INDICATE REQUIRED CLEARANCES.

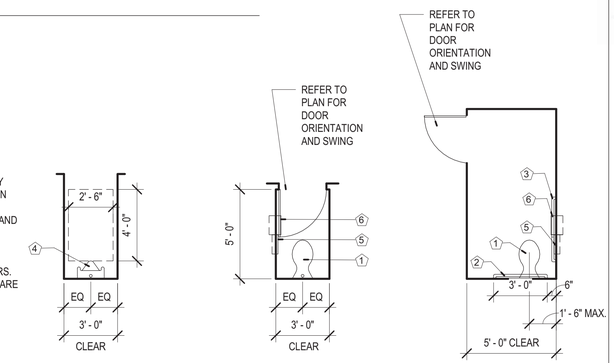

ENLARGED TYP. RESTROOM PLANS
1/4" = 1'-0"

PLUMBING FIXTURES AND ACCESSORIES LEGEND:

ALL FIXTURES, ACCESSORIES, AND INSTALLATIONS TO BE ACCESSIBLE AND IN FULL COMPLIANCE WITH ICC/ANSI 117.1. NUMBERS IN BRACKETS REFER TO ICC/ANSI 117.1 SECTION.

1. FLOOR-MOUNTED TOILET: SEE PLUMBING SPECS.
2. GRAB BAR: BOBRICK #B-5806 X 36 HORIZONTAL GRAB BAR WITH CONCEALED MOUNTING, SATIN FINISH STAINLESS STEEL - PROVIDE NECESSARY BLOCKING IN WALL FOR MOUNTING
3. GRAB BAR: BOBRICK #B-5806 X 42 HORIZONTAL GRAB BAR WITH CONCEALED MOUNTING, SATIN FINISH STAINLESS STEEL
4. GRAB BAR: 18" GRAB BAR BOBRICK MODEL #B6086 VERTICAL GRAB BAR WITH CONCEALED MOUNTING, SATIN FINISH STAINLESS STEEL
5. TOILET TISSUE DISPENSER: BOBRICK #B-2888 CLASSIC SERIES MULTI-ROLL TOILET TISSUE DISPENSER, SURFACE-MOUNTED
6. CHANGING STATION: KOALA KARE PRODUCTS #KB-200, SURFACE-MOUNTED SERIES - PROVIDE NECESSARY BLOCKING IN WALL FOR MOUNTING
7. RECESSED AUTOMATIC HAND DRYER: BOBRICK #B-3725, TRIMLINE SERIES, SEMI-RECESSED, SATIN FINISH STAINLESS STEEL - PROVIDE NECESSARY BLOCKING IN WALL FOR MOUNTING
8. WALL-MOUNTED LAVATORY: SEE PLUMBING SPECS.
9. DRINKING FOUNTAIN: BI-LEVEL ADA COMPLIANT, SEE PLUMBING SPECS.
10. SOAP DISPENSER: BOBRICK #B-2111 CLASSIC SERIES SURFACE-MOUNTED, SATIN-FINISH STAINLESS STEEL - PROVIDE NECESSARY BLOCKING IN WALL FOR MOUNTING
11. SANITARY DISPOSAL: BOBRICK #B-354 CLASSIC SERIES PARTITION-MOUNTED DUAL SIDED, SATIN FINISH STAINLESS STEEL (WOMEN'S RESTROOMS ONLY)
12. MIRROR: BOBRICK #B-165-2448, SERIES CHANNEL-FRAMED MIRROR 24"X48"
13. WALL-MOUNTED URINAL: SEE PLUMBING SPECS.
14. TOILET PARTITION: SEE SPECIFICATIONS
15. URINAL SCREEN: SEE SPECIFICATIONS
16. UTILITY SHELF W/BROOM HOLDER: BOBRICK #B-224 UTILITY SHELF WITH MOP/BROOM HOLDERS AND RAG HOOKS
17. COAT HOOKS: BOBRICK #B-2116 HEAVY-DUTY CLOTHES HOOK WITH CONCEALED MOUNTING.
18. FOOT DOOR PULL: SEE SPECIFICATIONS

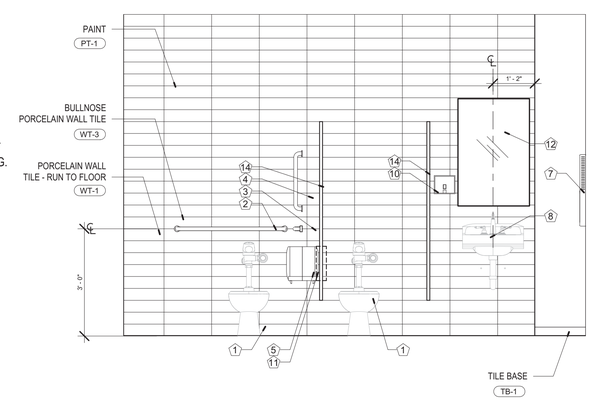

7 A-301 ELEVATION @ WOMENS RESTROOM
1/2" = 1'-0"

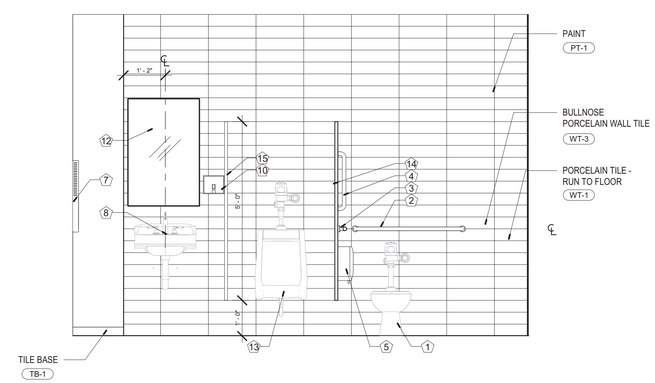

6 A-301 ELEVATION @ MENS RESTROOM
1/2" = 1'-0"

Scenic Regional Library
read, explore, grow

SCENIC REGIONAL LIBRARY
WRIGHT CITY BRANCH
60 WILDCAT DRIVE
WRIGHT CITY, MO 63390

JEMA
SDA ARCHITECTS

ARCHITECT-OF-RECORD
JEMA
3005 LOCUST ST.
ST. LOUIS, MO 63103
T (314) 531-7400
CONTACT: SCOTT CLARK
E-MAIL: SCLARK@JEMASTL.COM

DESIGN ARCHITECT
SAPP DESIGN ASSOCIATES ARCHITECTS
3750 SOUTH FREMONT
SPRINGFIELD, MO 65804
T (417) 877-9600
F (417) 877-9696
CONTACT: JAMES STUFFLEBEAM
E: STUFFLEBEAM@SDAARCHITECTS.COM

CIVIL
COCHRAN
530A E. INDEPENDENCE DRIVE
UNION, MO 63084
CONTACT: DAVE VAN LEER
T (636) 584-0540
F (636) 584-0512
E-MAIL: DVANLEER@COCHRAN.COM

STRUCTURAL
ALPER AUDI, INC.
1804 BORMAN CIRCLE DRIVE
ST. LOUIS, MO 63146
T (314) 432-8600
F (314) 807-2774
CONTACT: STEVE EHRETT
E-MAIL: STEVE.EHRETT@ALPERAUDI.COM

MECHANICAL, ELECTRICAL, PLUMBING
BRIC PARTNERSHIP, LLC
343 S. KIRKWOOD ROAD, SUITE 204
KIRKWOOD, MO 63122
T (314) 725-5889
CONTACT: BRUCE COLEMAN
E: BCOLEMAN@BRICPARTNERSHIP.COM

ARCHITECT OF RECORD:

JOHN EDWARD MUELLER
MO ARCHITECTURAL LICENSE A2010039554
MO CERTIFICATE OF AUTHORITY A2014008380

No.	Date	Description
	06/13/17	ISSUED FOR RE-BID

DRAWN BY: SC/SH

PROJECT NUMBER: 16-1161.03

SHEET TITLE:
ENLARGED FLOOR PLANS

A-301

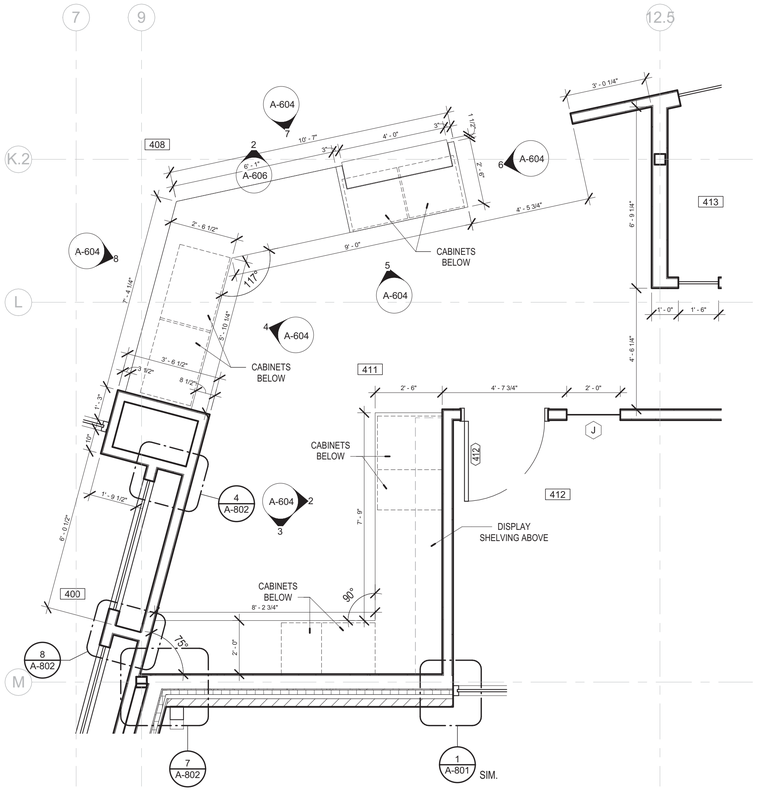

1 A-302 ENLARGED PLAN @ CIRCULATION DESK
3/8" = 1'-0"

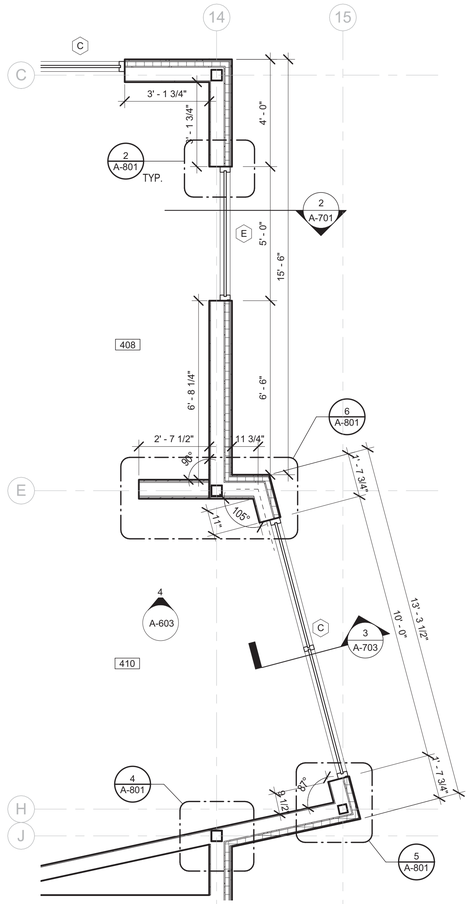

2 A-302 ENLARGED PLAN @ TEEN AREA
3/8" = 1'-0"

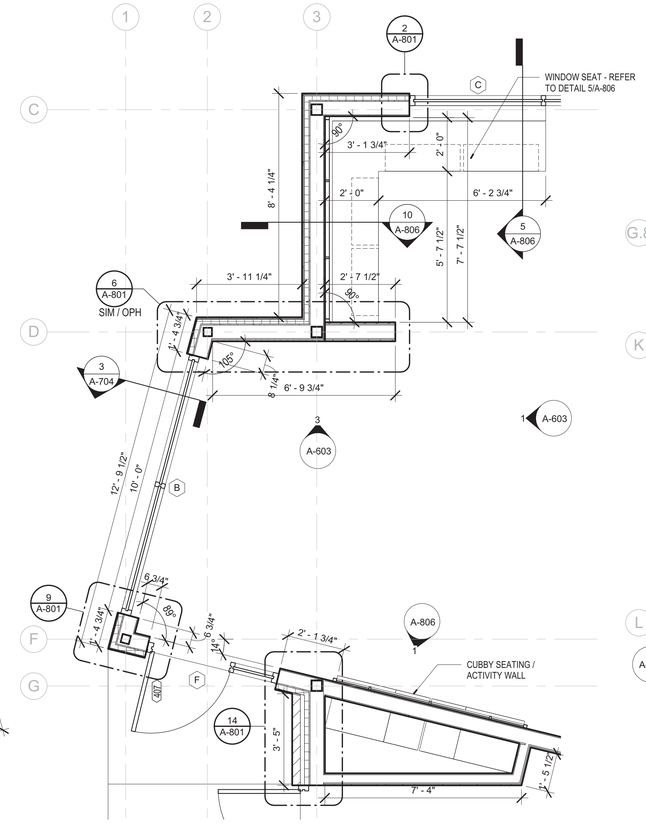

3 A-302 ENLARGED PLAN @ CHILDREN AREA
3/8" = 1'-0"

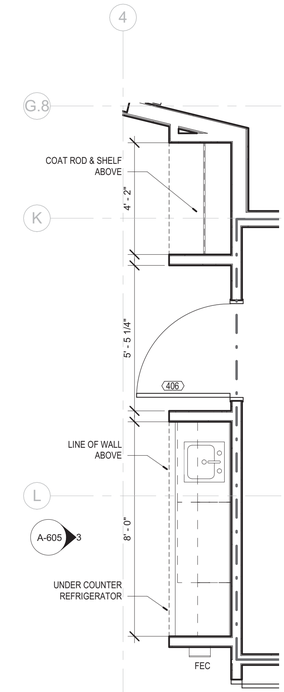

4 A-302 ENLARGED PLAN @ MEETING ROOM
3/8" = 1'-0"

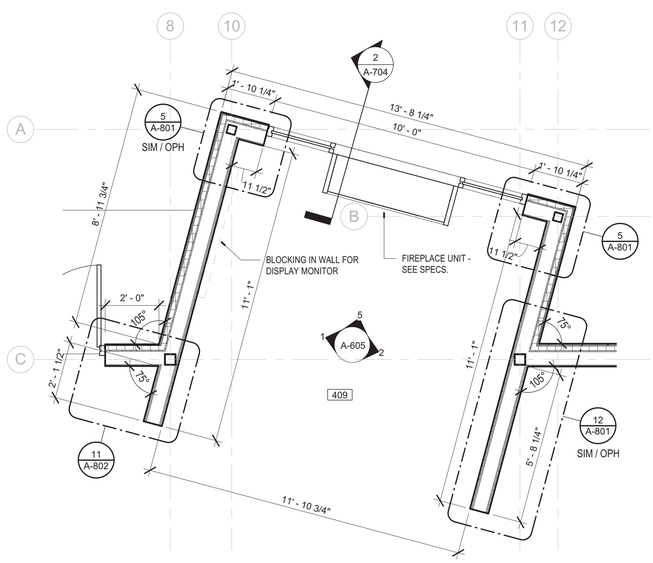

5 A-302 ENLARGED PLAN @ ADULT AREA
3/8" = 1'-0"

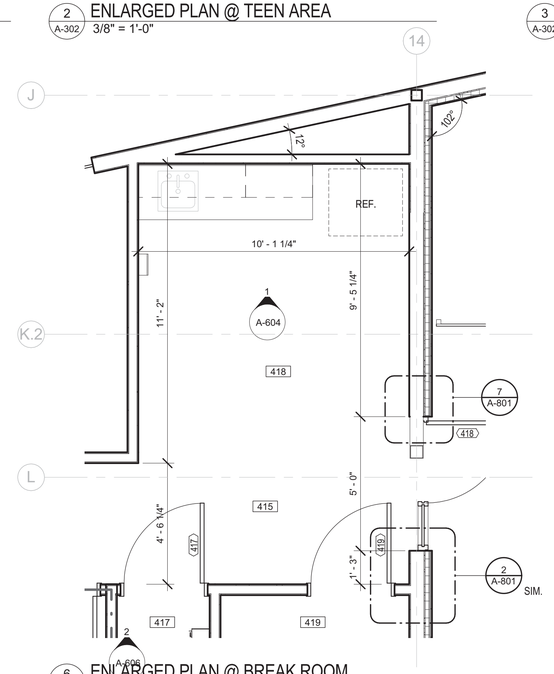

6 A-302 ENLARGED PLAN @ BREAK ROOM
3/8" = 1'-0"

Scenic Regional Library
read, explore, grow

SCENIC REGIONAL LIBRARY
WRIGHT CITY BRANCH
60 WILDCAT DRIVE
WRIGHT CITY, MO 63390

JEMA
SDA ARCHITECTS

ARCHITECT-OF-RECORD
JEMA
3005 LOCUST ST.
ST. LOUIS, MO 63103
T (314) 531-7400
CONTACT: SCOTT CLARK
E-MAIL: SCLARK@JEMASTL.COM

DESIGN ARCHITECT
SAPP DESIGN ASSOCIATES ARCHITECTS
3750 SOUTH FREMONT
SPRINGFIELD, MO 65804
T (417) 877-9600
F (417) 877-9696
CONTACT: JAMES STUFFLEBEAM
E: STUFFLEBEAM@SDAARCHITECTS.COM

CIVIL
COCHRAN
530A E. INDEPENDENCE DRIVE
UNION, MO 63084
CONTACT: DAVE VAN LEER
T (636) 584-0540
F (636) 584-0512
E-MAIL: DVANLEER@COCHRAN.COM

STRUCTURAL
ALPER AUDI, INC.
1804 BORMAN CIRCLE DRIVE
ST. LOUIS, MO 63146
T (314) 432-8600
F (314) 807-2774
CONTACT: STEVE EHRETT
E-MAIL: STEVE.EHRETT@ALPERAUDI.COM

MECHANICAL, ELECTRICAL, PLUMBING
BRIC PARTNERSHIP, LLC
343 S. KIRKWOOD ROAD, SUITE 204
KIRKWOOD, MO 63122
T (314) 725-5889
CONTACT: BRUCE COLEMAN
E: BCOLEMAN@BRICPARTNERSHIP.COM

ARCHITECT OF RECORD:

JOHN EDWARD MUELLER
MO ARCHITECTURAL LICENSE A2010039554
MO CERTIFICATE OF AUTHORITY A2014008380

No.	Date	Description
	06/13/17	ISSUED FOR RE-BID

DRAWN BY: **SC/SH**

PROJECT NUMBER: **16-1161.03**

SHEET TITLE:
ENLARGED FLOOR PLANS

A-302

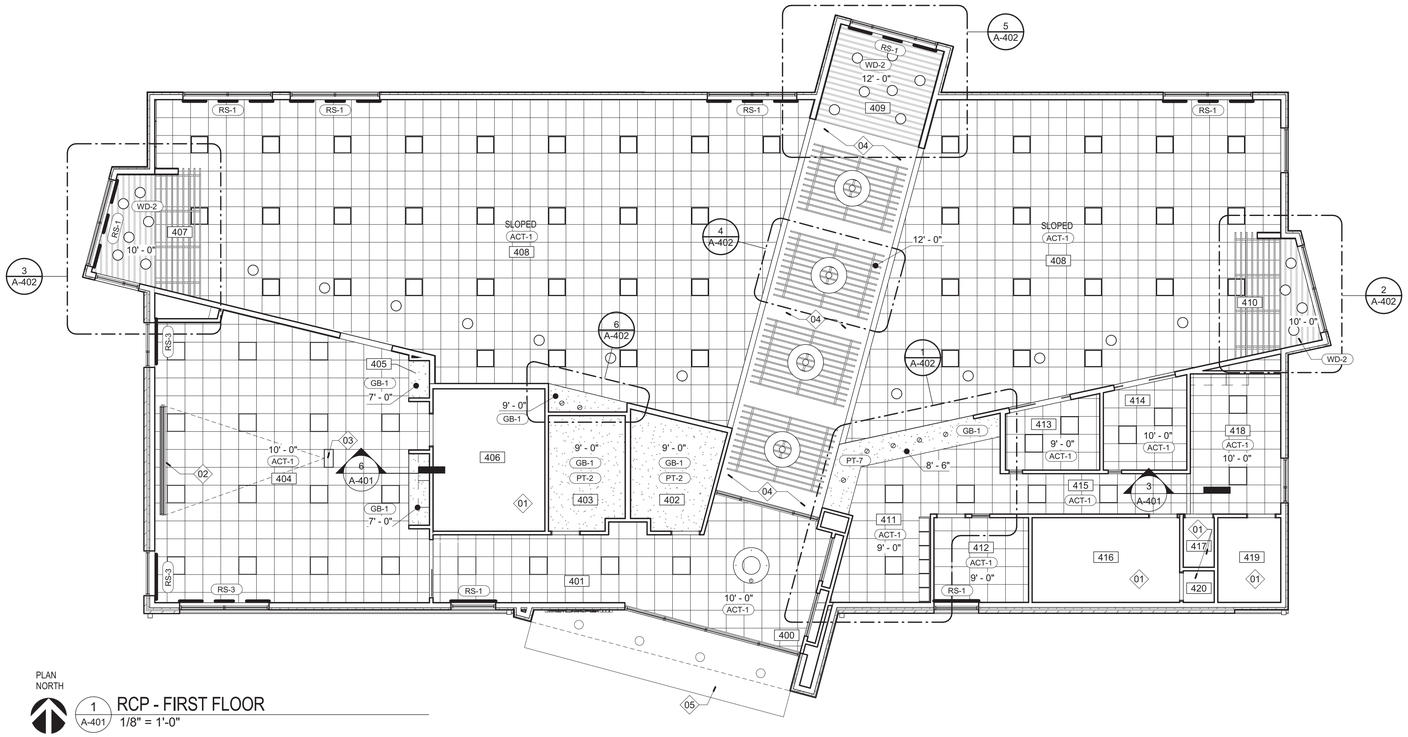

1 A-401 RCP - FIRST FLOOR
1/8" = 1'-0"

GENERAL NOTES - RCP

1. REFER TO SHEET A-001 FOR RCP GENERAL NOTES.

KEYED NOTES - RCP	
01	NO CEILING THIS ROOM/AREA
02	POWERED PROJECTOR SCREEN, REFER TO SPECS.
03	LOCATION OF PROJECTOR, OFCI. CONTRACTOR TO PROVIDE ALL SUPPORT ABOVE CEILING FOR PROJECTOR.
04	PAINT ALL EXPOSED STRUCTURE, DECKING, CONDUIT, PIPING, HANGER, LIGHT FIXTURE CABLING, ETC PT-2.FACE OF ADJACENT PARTITION, WHERE EXISTS - REFER TO PLAN
05	COMPOSITE METAL PANEL CEILING TO MATCH CANOPY, REFER TO SPECS.

ROOM SCHEDULE

Number	Name
400	VESTIBULE
401	CORRIDOR
402	MENS
403	WOMENS
404	MEETING ROOM
405	COATS
406	STORAGE
407	CHILDREN AREA
408	CIRCULATION
409	ADULT AREA
410	TEEN AREA
411	WORK ROOM
412	OFFICE
413	STUDY
414	STUDY
415	CORRIDOR
416	STORAGE
417	JANITORS CLOSET
418	BREAK ROOM
419	MECH / ELEC
420	BOOK DROP

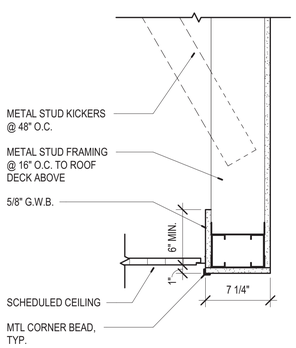

2 A-401 BULKHEAD DETAIL
1 1/2" = 1'-0"

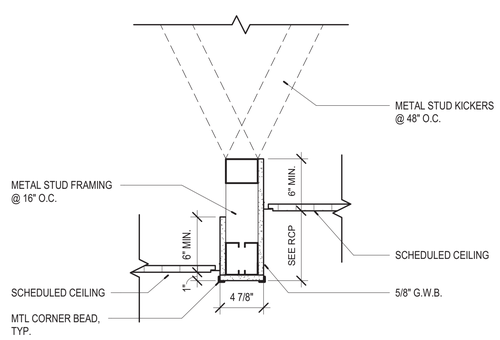

3 A-401 BULKHEAD DETAIL
1 1/2" = 1'-0"

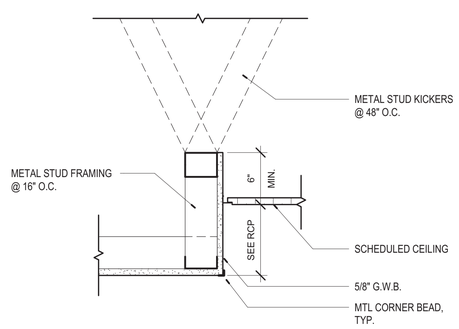

4 A-401 BULKHEAD DETAIL
1 1/2" = 1'-0"

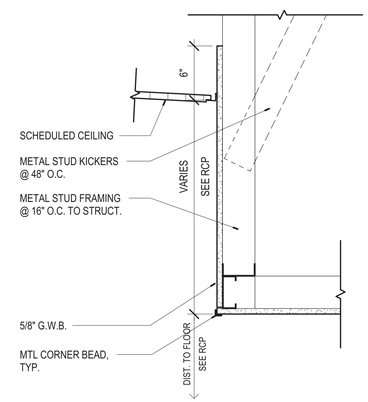

5 A-401 BULKHEAD DETAIL
1 1/2" = 1'-0"

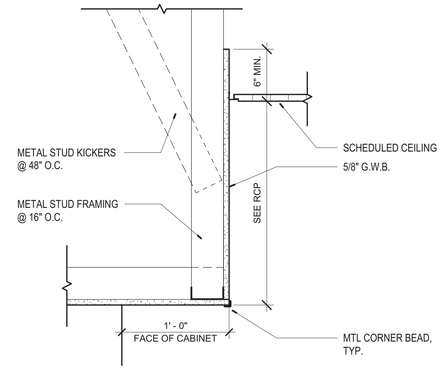

6 A-401 BULKHEAD DETAIL
1 1/2" = 1'-0"

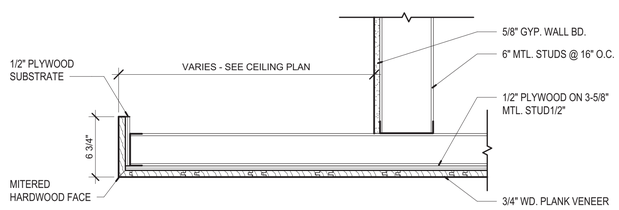

7 A-401 CEILING DETAIL
1 1/2" = 1'-0"

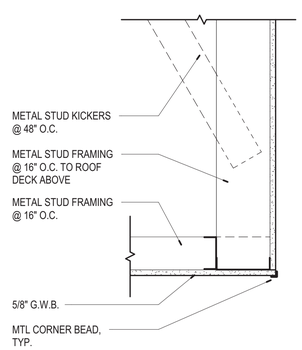

8 A-401 BULKHEAD DETAIL
1 1/2" = 1'-0"

Scenic Regional Library
read, explore, grow

SCENIC REGIONAL LIBRARY
WRIGHT CITY BRANCH
60 WILDCAT DRIVE
WRIGHT CITY, MO 63390

JEMA
SDA ARCHITECTS

ARCHITECT-OF-RECORD
JEMA
3005 LOCUST ST.
ST. LOUIS, MO 63103
T (314) 531-7400
CONTACT: SCOTT CLARK
E-MAIL: SCLARK@JEMASTL.COM

DESIGN ARCHITECT
SAPP DESIGN ASSOCIATES ARCHITECTS
3750 SOUTH FREMONT
SPRINGFIELD, MO 65804
T (417) 877-9600
F (417) 877-9696
CONTACT: JAMES STUFFLEBEAM
E: STUFFLEBEAM@SDAARCHITECTS.COM

CIVIL
COCHRAN
530A E. INDEPENDENCE DRIVE
UNION, MO 63084
CONTACT: DAVE VAN LEER
T (636) 584-0540
F (636) 584-0512
E-MAIL: DVANLEER@COCHRAN.COM

STRUCTURAL
ALPER AUDI, INC.
1804 BORMAN CIRCLE DRIVE
ST. LOUIS, MO 63146
T (314) 432-8600
F (314) 807-2774
CONTACT: STEVE EHRETT
E-MAIL: STEVE.EHRETT@ALPERAUDI.COM

MECHANICAL, ELECTRICAL, PLUMBING
BRIC PARTNERSHIP, LLC
343 S. KIRKWOOD ROAD, SUITE 204
KIRKWOOD, MO 63122
T (314) 725-5889
CONTACT: BRUCE COLEMAN
E: BCOLEMAN@BRICPARTNERSHIP.COM

ARCHITECT OF RECORD:

JOHN EDWARD MUELLER
MO ARCHITECTURAL LICENSE A2010039554
MO CERTIFICATE OF AUTHORITY A2014008380

No.	Date	Description
	06/13/17	ISSUED FOR RE-BID

DRAWN BY: **SC/SH**

PROJECT NUMBER: **16-1161.03**

SHEET TITLE:
RCP - FIRST FLOOR

A-401

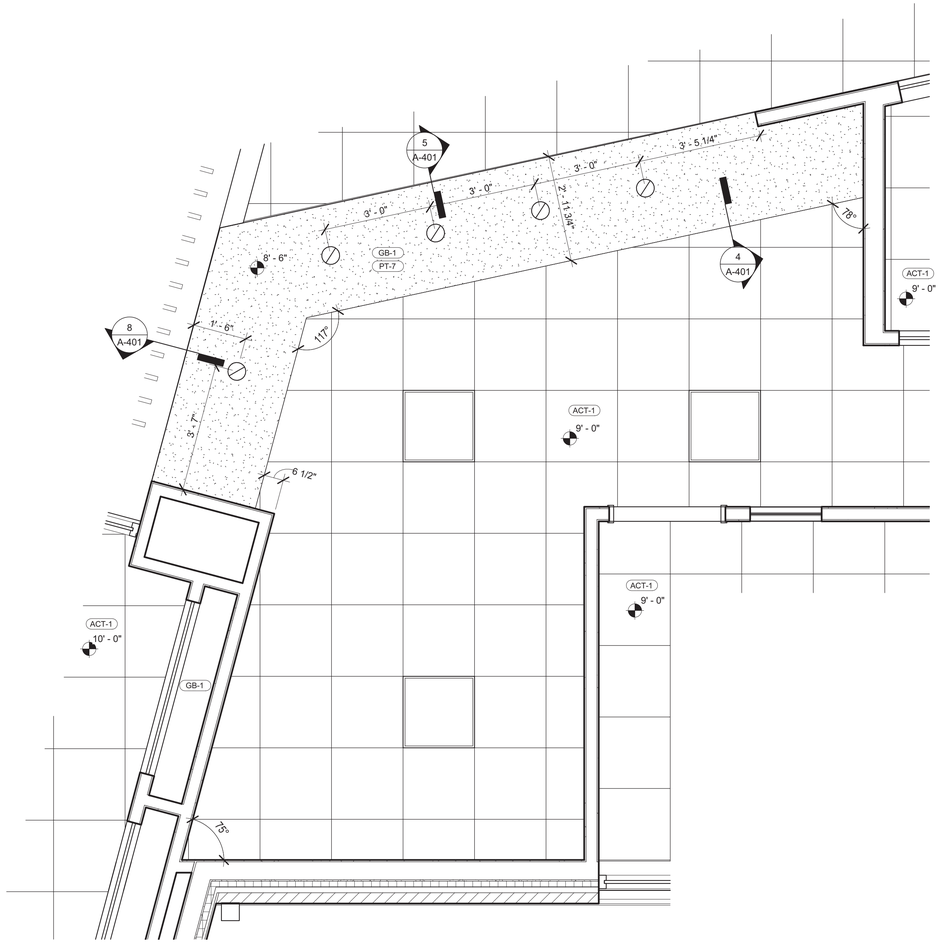

1 A-402 ENLARGED CEILING @ CIRCULATION DESK
1/2" = 1'-0"

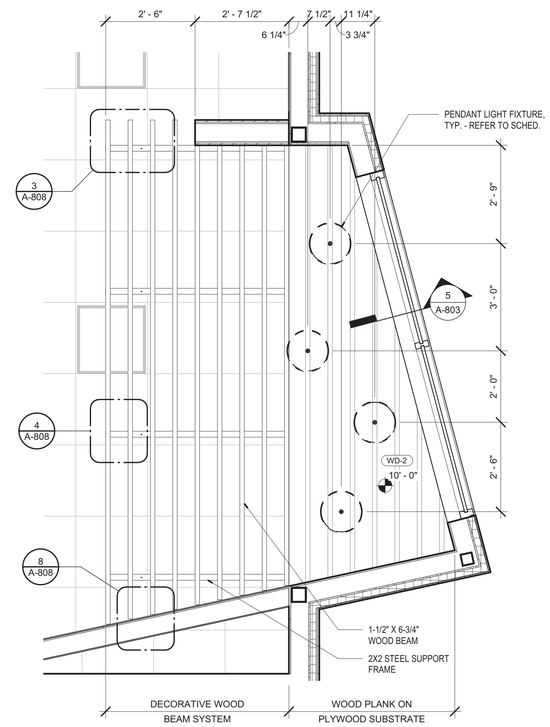

2 A-402 ENLARGED CEILING @ TEENS
1/2" = 1'-0"

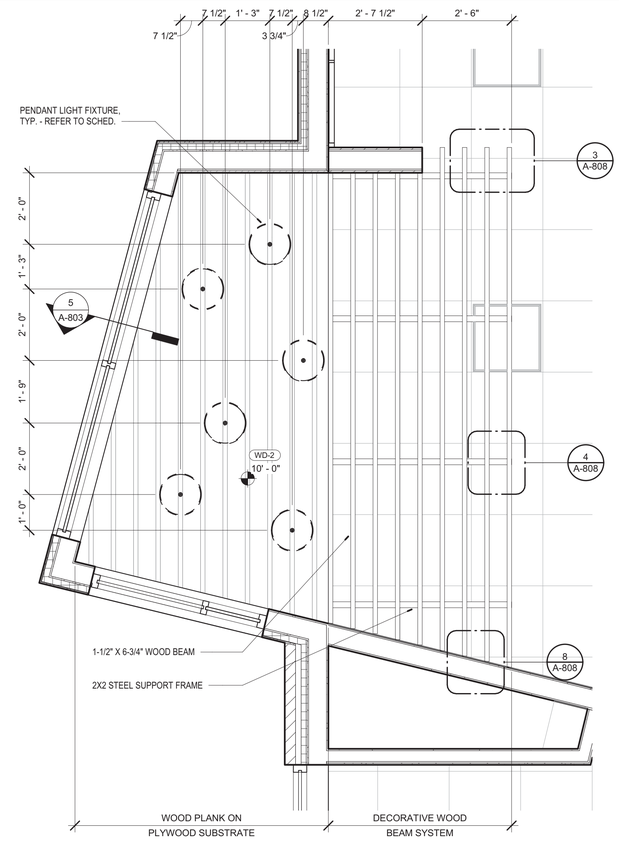

3 A-402 ENLARGED CEILING @ CHILDREN
1/2" = 1'-0"

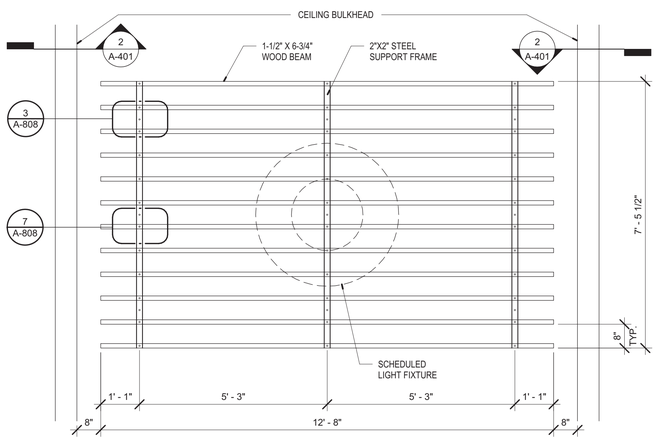

4 A-402 ENLARGED CEILING PLAN @ DECORATIVE CLOUD
1/2" = 1'-0"

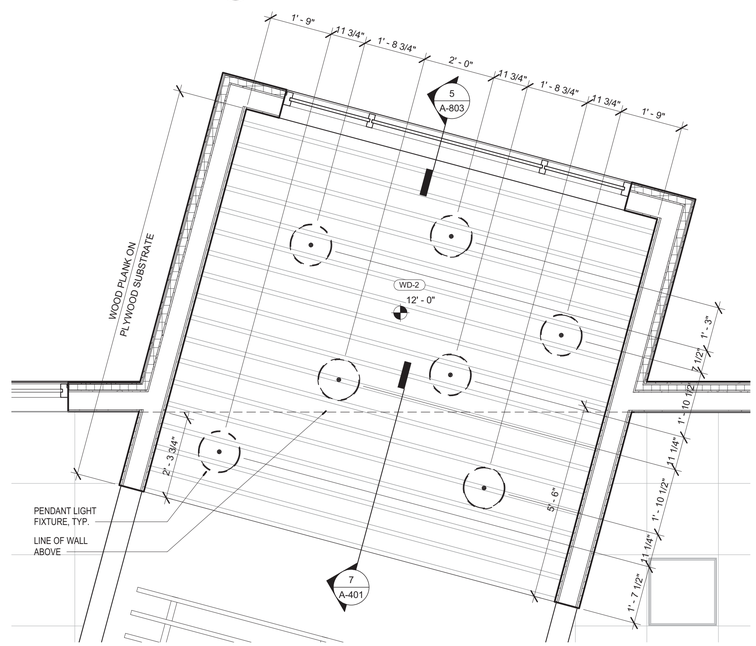

5 A-402 ENLARGED CEILING @ ADULTS
1/2" = 1'-0"

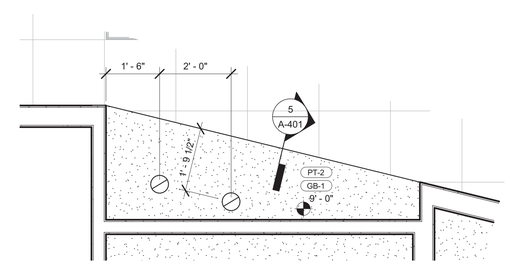

6 A-402 ENLARGED CEILING @ COFFEE BAR
1/2" = 1'-0"

Scenic Regional Library
read, explore, grow

SCENIC REGIONAL LIBRARY
WRIGHT CITY BRANCH
60 WILDCAT DRIVE
WRIGHT CITY, MO 63390

JEMA
SDA ARCHITECTS

ARCHITECT-OF-RECORD
JEMA
3005 LOCUST ST.
ST. LOUIS, MO 63103
T (314) 531-7400
CONTACT: SCOTT CLARK
E-MAIL: SCLARK@JEMASTL.COM

DESIGN ARCHITECT
SAPP DESIGN ASSOCIATES ARCHITECTS
3750 SOUTH FREMONT
SPRINGFIELD, MO 65804
T (417) 877-9600
F (417) 877-9696
CONTACT: JAMES STUFFLEBEAM
E: STUFFLEBEAM@SDAARCHITECTS.COM

CIVIL
COCHRAN
530A E. INDEPENDENCE DRIVE
UNION, MO 63084
CONTACT: DAVE VAN LEER
T (636) 584-0540
F (636) 584-0512
E-MAIL: DVANLEER@COCHRAN.COM

STRUCTURAL
ALPER AUDI, INC.
1804 BORMAN CIRCLE DRIVE
ST. LOUIS, MO 63146
T (314) 432-8600
F (314) 807-2774
CONTACT: STEVE EHRETT
E-MAIL: STEVE.EHRETT@ALPERAUDI.COM

MECHANICAL, ELECTRICAL, PLUMBING
BRIC PARTNERSHIP, LLC
343 S. KIRKWOOD ROAD, SUITE 204
KIRKWOOD, MO 63122
T (314) 725-5889
CONTACT: BRUCE COLEMAN
E: BCOLEMAN@BRICPARTNERSHIP.COM

ARCHITECT OF RECORD:

JOHN EDWARD MUELLER
MO ARCHITECTURAL LICENSE A2010039554
MO CERTIFICATE OF AUTHORITY A2014008380

No.	Date	Description
	06/13/17	ISSUED FOR RE-BID

DRAWN BY: **SC/SH**

PROJECT NUMBER: **16-1161.03**

SHEET TITLE:
ENLARGED CEILING PLANS

A-402

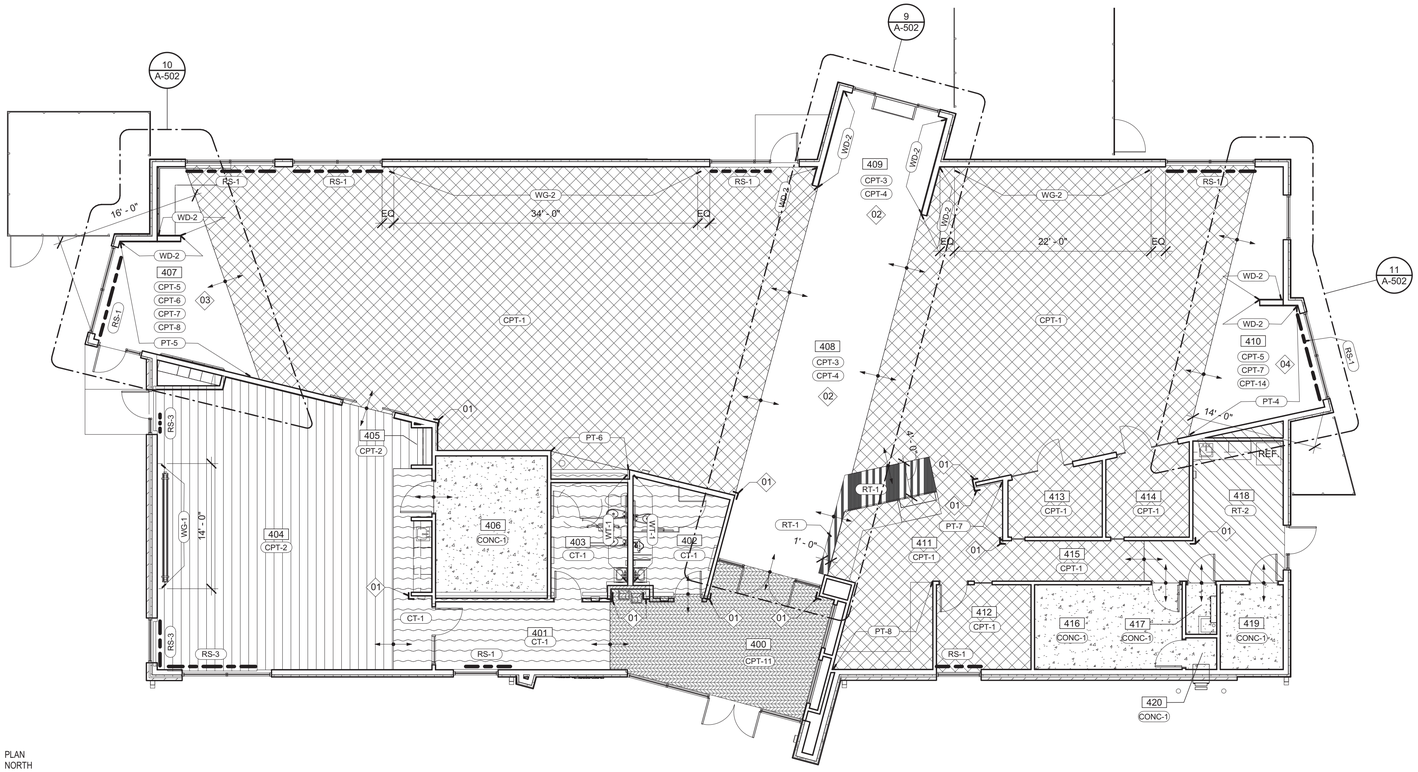

PLAN NORTH

1 / A-501 FINISH PLAN
1/8" = 1'-0"

GENERAL NOTES - FINISH PLAN

1. FINISH PLAN GENERAL NOTE

KEYED NOTES - FINISH PLAN	
Keynote Number	Description
01	PROVIDE CORNER GUARD THIS LOCATION, SEE SPECS.
02	COMBINATION OF CPT-3 AND CPT-4 THIS AREA.
03	COMBINATION OF CPT-5, CPT-6, CPT-7 AND CPT-8 THIS AREA.
04	COMBINATION OF CPT-5, CPT-7 AND CPT-14 THIS AREA.

FINISH LEGEND

NOTE; NOT ALL FINISHES LISTED BELOW APPLY TO THIS BRANCH, REFER TO DRAWINGS FOR ALL FINISH LOCATIONS.

CPT-1
DESC: MODULAR CARPET TILE (18X36)
MNF: TANDUS CENTIVA
STYLE: EVANESCE 04617
COLOR: SPACE GREY 73702
INSTALLATION: HERRINGBONE
SIZE: 18" X 36"

CPT-2
DESC: MODULAR CARPET TILE (24X24)
MNF: TANDUS CENTIVA
STYLE: EVANESCE 04617
COLOR: SPACE GREY 73702
INSTALLATION: VERTICAL ASHLAR
SIZE: 24" X 24"

CPT-3
DESC: MODULAR CARPET TILE (24X24)
MNF: TANDUS CENTIVA
3A STYLE: EVANESCE 04617
COLOR: OPEN OCEAN 73706
INSTALLATION: 1/4 TURN
SIZE: 24" X 24"

CPT-4
DESC: MODULAR CARPET TILE (24X24)
MNF: TANDUS CENTIVA
3B STYLE: ROCK SOLID II
COLOR: BLUE GRANITE 20421
INSTALLATION: 1/4 TURN
SIZE: 24" X 24"

CPT-5
DESC: MODULAR CARPET TILE (24X24)
MNF: SHAW CONTRACT GROUP
STYLE: VIEW
COLOR: GAZE 78530
INSTALLATION: 1/4 TURN
SIZE: 24" X 24"

CPT-6
DESC: MODULAR CARPET TILE (24X24)
MNF: SHAW CONTRACT GROUP
STYLE: COLOR FORM
COLOR: IMAGINE 81375
INSTALLATION: 1/4 TURN
SIZE: 24" X 24"

CPT-7
DESC: MODULAR CARPET TILE (24X24)
MNF: SHAW CONTRACT GROUP
STYLE: VIEW
COLOR: OVERLOOK 78436
INSTALLATION: 1/4 TURN
SIZE: 24" X 24"

CPT-8
DESC: MODULAR CARPET TILE (24X24)
MNF: SHAW CONTRACT GROUP
STYLE: VIEW
COLOR: GLIMPSE 78855
INSTALLATION: 1/4 TURN
SIZE: 24" X 24"

CPT-9
DESC: MODULAR CARPET TILE (24X24)
MNF: SHAW CONTRACT GROUP
STYLE: COLOR FORM
COLOR: PUZZLE 81991
INSTALLATION: 1/4 TURN
SIZE: 24" X 24"

CPT-10
DESC: MODULAR CARPET TILE (24X24)
MNF: SHAW CONTRACT GROUP
STYLE: VIEW
COLOR: SPACE 78500
INSTALLATION: 1/4 TURN
SIZE: 24" X 24"

CPT-11
DESC: MODULAR CARPET TILE (24X24)
MNF: TANDUS CENTIVA
STYLE: ABRESIVE ACTION 02578
COLOR: CHARCOAL 19100
INSTALLATION: MONOLITHIC
SIZE: 24" X 24"

CPT-12
DESC: MODULAR CARPET TILE (24X24)
MNF: SHAW CONTRACT GROUP
STYLE: VIEW
COLOR: LANDSCAPE 78675
INSTALLATION: 1/4 TURN
SIZE: 24" X 24"

CPT-13
DESC: MODULAR CARPET TILE (24X24)
MNF: SHAW CONTRACT GROUP
STYLE: VIEW
COLOR: EMBER 81870
INSTALLATION: 1/4 TURN
SIZE: 24" X 24"

CPT-14
DESC: MODULAR CARPET TILE (24X24)
MNF: SHAW CONTRACT GROUP
STYLE: VIEW
COLOR: PLACE 78210
INSTALLATION: 1/4 TURN
SIZE: 24" X 24"

CT-1
DESCRIPTION: 6X24 PORCELAIN TILE
MNF: TRENDS IN TILE, EURO COLLECTION
STYLE: ERAMOSA COLOR:SILVER
SIZE: 6" X 24" INSTALLATION: 1/3 OFFSET
GROUT: MAPEI 02 PEWTER OR LATICRETE
90 LIGHT PEWTER.

CONC-1
DESCRIPTION: SEALED CONCRETE
COLOR: CLEAR MATTE FINISH

RT-1
DESCRIPTION: LUXURY VINYL TILE
MNF: SHAW HARD SURFACE
STYLE: GRAIN+PIGMENT COLOR: GREEN 65326
LOCATION: CIRCULATION DESK FRONT

RT-2
DESCRIPTION: LUXURY VINYL TILE
MNF: SHAW HARD SURFACE
STYLE: GRAIN+PIGMENT COLOR: BONE 65515
LOCATION: BREAKROOM

TB-1
DESCRIPTION: 3X24 PORCELAIN TILE BASE
MNF: TRENDS IN TILE, EURO COLLECTION
STYLE: ERAMOSA COLOR:SILVER
SIZE: 3" X 24" GROUT: MAPEI 02 PEWTER
OR LATICRETE 90 LIGHT PEWTER.

RB-1
DESCRIPTION: 4" VINYL BASE
MNF: JOHNSONITE
STYLE: 4" STRAIGHT BASE COLOR: 63 BURNT UMBER

FB-1A
DESCRIPTION: CHILDREN'S CUSHION
MNF: ARC-COM, STYLE: AXIS
NUMBER: AC-61346, COLOR: CHILLI #7

FB-1B
DESCRIPTION: CHILDREN'S CUSHION
MNF: ARC-COM, STYLE: AXIS
NUMBER: AC-61345, COLOR: PUMPKIN #6

FB-1C
DESCRIPTION: CHILDREN'S CUSHION
MNF: ARC-COM, STYLE: AXIS
NUMBER: AC-61349, COLOR: LIME #10

FB-1D
DESCRIPTION: CHILDREN'S CUSHION
MNF: ARC-COM, STYLE: AXIS
NUMBER: AC-61340, COLOR: SEAGLASS #1

FB-1E
DESCRIPTION: CHILDREN'S CUSHION
MNF: ARC-COM, STYLE: AXIS
NUMBER: AC-61352, COLOR: OCEAN #13

WT-1
DESCRIPTION: WALL TILE
MNF: ISC SURFACES ANATOLIA TILE
SERIES: SOHO SIZE: 4" X 16"
COLOR: TAUPE GLOSSY
GROUT: MAPEI 02 PEWTER OR LATICRETE 90
LIGHT PEWTER.
LOCATION: RESTROOM WET WALLS

WT-2
DESCRIPTION: 6X24 PORCELAIN TILE
MNF: TRENDS IN TILE, EURO COLLECTION
STYLE: ERAMOSA COLOR:SILVER
SIZE: 6" X 24" INSTALLATION: SEE DETAILS
GROUT: MAPEI 02 PEWTER OR LATICRETE 90
LIGHT PEWTER.

WT-3
DESCRIPTION: WALL TILE - BULLNOSE
MNF: ISC SURFACES ANATOLIA TILE
SERIES: SOHO SIZE: 4" X 8"
COLOR: TAUPE GLOSSY
GROUT: MAPEI 02 PEWTER OR LATICRETE 90 LIGHT
PEWTER.
LOCATION: RESTROOM WET WALLS @ PERIMETER EDGE

GL-1
DESCRIPTION: 1" IG UNIT, LOW-E INSUL. GLASS
MNF: PPG, STYLE: SOLARBAN 60
COLOR: OPTIGRAY + CLEAR

GL-2
DESCRIPTION: 1/4" CLEAR TEMPERED GLASS

GL-3
DESCRIPTION: 1/2" CLEAR TEMPERED GLASS

GL-4
DESCRIPTION: 1" IG UNIT, SPANDREL GLASS
MNF: PPG, STYLE: SOLARBAN 60 + OPACI-COAT-300
COLOR: CLEAR + CLEAR GLASS, MEDIUM GRAY
SURFACE: MEDIUM GRAY, SURFACE #3

ACT-1
DISC: 2 X 2 ACOUSTICAL CEILING TILE
MNF: ARMSTRONG
STYLE: ULTIMA BEVELED TEGULAR #1942
SIZE: 24" X 24" COLOR: WHITE
GRID 9/16"

GB-1
DISC: 1/2" GYPSUM BOARD
COLOR: PT-2

WD-1
SPECIES: RED OAK
CUT: PLAIN-SLICED VENEER
MATCH: SLIP-MATCHED
FINISH: MATCH VT INDUSTRIES
CHOCOLATE, CH15
LOOCATION: ALL INTERIOR DOORS

WD-2
SPECIES: WHITE MAPLE
CUT: PLAIN-SLICED VENEER
FINISH: CLEAR SATIN
LOOCATION: CEILING AND WALLS

PT-1
MNF: SHERWIN-WILLIAMS
COLOR: TBD
LOCATION: GENERAL WALL COLOR

PT-2
MNF: SHERWIN-WILLIAMS
COLOR: TBD
LOCATION: GENERAL CLG. COLOR

PT-3
MNF: SHERWIN-WILLIAMS
COLOR: TBD
LOCATION: DOOR FRAME COLOR

PT-4
MNF: SHERWIN-WILLIAMS
COLOR: TBD
LOCATION: ACCENT PAINT TEENS

PT-5
MNF: SHERWIN-WILLIAMS
COLOR: TBD
LOCATION: ACCENT PAINT CHILDRENS

PT-6
MNF: SHERWIN-WILLIAMS
COLOR: TBD
LOCATION: ACCENT PAINT COFFEE

PT-7
MNF: SHERWIN-WILLIAMS
COLOR: TBD
LOCATION: ACCENT PAINT CIRCULATION

PT-8
MNF: SHERWIN-WILLIAMS
COLOR: TBD
LOCATION: ACCENT PAINT WORK ROOM

PT-9
MNF: SHERWIN-WILLIAMS
COLOR: TBD
LOCATION: EXT. METAL DOORS

RB-1
DESCRIPTION: 4" VINYL BASE
MNF: JOHNSONITE
SIZE: 4" HIGH STRAIGHT BASE
COLOR: 63 BURNT UMBER

PL-1
MNF: FORMICA
COLOR: 5886-43 SORREL CHERRY
FINISH; ARTISAN
LOCATION: CIRCULATION DESK/
COFFEE,FIREPLACE VERTICAL SURFACES.

PL-2
MNF: LAMIN-ART
COLOR: 3057-VT
FINISH: VELVA-TEX
LOCATION: WORK RM./ MTG. RM./BREAK RM.
VERTICAL SURFACES.

PL-3
MNF: FORMICA
COLOR: 961-58 FOG
FINISH: MATTE
LOCATION: WORK RM./BREAK RM. TOPS

PL-4
MNF: FORMICA
COLOR: M2178 BRUSHED STAINLESS STEEL
LOCATION: CIRCULATION DESK AND
FIREPLACE BASE

PL-5
MNF: FORMICA
COLOR: STOP RED 839-58
FINISH: MATTE FINISH

PL-6
MNF: FORMICA
COLOR: VIBRANT GREEN 6901-58
FINISH: MATTE FINISH

PL-7
MNF: FORMICA
COLOR: SPECTRUM BLUE 851-AN
FINISH: INFINITI FINISH

SS-1
MNF: AVONITE
COLOR: NORDIC F1-9119
LOCATION: CIRCULATION COUNTER INSET,
MTG. RM./COFFEE TOPS

HW-1
MNF: DOUG MOCKETT & COMPANY, INC.
STYLE: DP105/3 SERIES SQUARE PULL
COLOR: STAINLESS STEEL
SIZE: 6 27/32 X 9/16 SQUARE PULL

WG-1
DESCRIPTION: VINYL WALL GRAPHIC
MNF:
SIZE: SEE PLAN AND ELEVATION

WG-2
DESCRIPTION: CUSTOM DIGITAL WALL IMAGE
MNF: ARC-COM
TYPE II VINYL, CUSTOM IMAGE TO BE DETERMINED.
SIZE: (1) 28'-0" WIDE BY 8'-0" TALL, BOT. AT 6'-0" AFF.
(1) 35'-0" WIDE BY 8'-0" TALL, BOT. AT 6'-0" AFF.
REP CONTACT: AFTEN ZURLIENE, 314-465-2257
AZURLIENE@ARC-COM.COM

RS-1
DESCRIPTION: SINGLE MANUAL ROLLER SHADE
MNF: SWF CONTRACT
FABRIC COLOR: PEARL GRAY, SHEAWEAVE 2360
OPENNESS: 10%

RS-2
DESCRIPTION: SINGLE MANUAL BLACK-OUT SHADE
MNF: SWF CONTRACT
OPENNESS: FULL BLACK-OUT, BLACK DUPLEX R6039

RS-3
DESCRIPTION: DUEL MANUAL BLACK-OUT/FABRIC SHADE
MNF: SWF CONTRACT
FABRIC COLOR: PEARL GRAY, SHEAWEAVE 2360
OPENNESS: 10%
OPENNESS: FULL BLACK-OUT, BLACK DUPLEX R6039

FCP-1
DESCRIPTION: FIBER CEMENT SIDING
MNF: NICHIHA USA, INC.
STYLE: ARCHITECTURAL BLOCK SERIES
SIZE: 1818 WITH 1/3 OFFSET LAYOUT
COLOR: GREY

FCP-2
DESCRIPTION: FIBER CEMENT SIDING
MNF: NICHIHA USA, INC.
STYLE: ILLUMINATIONS SERIES
SIZE: 1818 WITH STACK BOND LAYOUT
COLOR: COLOR MATCH A, ARCH. SAMPLE

ROOM FINISH SCHEDULE - 1ST FLOOR

NUMBER	NAME	FLOORING		WALLS				CEILING FINISH	REMARKS
		FLOOR FINISH	BASE	NORTH WALL	SOUTH WALL	EAST WALL	WEST WALL		
400	VESTIBULE	CPT-11	RB-1	PT-1	PT-1	PT-1	PT-1	ACT-1	
401	CORRIDOR	CT-1	TB-1	PT-1	PT-1	PT-1	PT-1	ACT-1	
402	MENS	CT-1	TB-1	PT-1	PT-1	PT-1	WT-1	GB-1	NO TB-1 ON WET WALL, REF ELEVATION
403	WOMENS	CT-1	TB-1	PT-1	PT-1	WT-1	PT-1	GB-1	NO TB-1 ON WET WALL, REF ELEVATION
404	MEETING ROOM	CPT-2	RB-1	PT-1	PT-1	PT-1	PT-1/WG-1	ACT-1	GB-1 SOFFIT AT COUNTER
405	COATS	CPT-2	RB-1	PT-1	PT-1	PT-1	N/A	GB-1	
406	STORAGE	CONC-1	RB-1	PT-1	PT-1	PT-1	PT-1	N/A	
407	CHILDREN AREA	CPT-5,6,7,8	RB-1	WD-2	PT-5	N/A	PT-5	WD-2/ACT-1	ACT-1 ON UPPER CEILING
408	CIRCULATION	CPT-1	RB-1	PT-1/WG-2	PT-1/PT-6	PT-1	PT-1	ACT-1	
409	ADULT AREA	CPT-3, CPT-4	RB-1	PT-1	N/A	WD-2	WD-2	WD-2/ACT-1	ACT-1 ON UPPER CEILING
410	TEEN AREA	CPT-5,7,14	RB-1	WD-2	PT-4	PT-4	N/A	WD-2/ACT-1	ACT-1 ON UPPER CEILING
411	WORK ROOM	CPT-1	RB-1	PT-1	PT-8	PT-1/PT-7	PT-1	ACT-1	
412	OFFICE	CPT-1	RB-1	PT-1	PT-1	PT-1	PT-1	ACT-1	
413	STUDY	CPT-1	RB-1	PT-1	PT-1	PT-1	PT-1	ACT-1	
414	STUDY	CPT-1	RB-1	PT-1	PT-1	PT-1	PT-1	ACT-1	
415	CORRIDOR	CPT-1/RT-2	RB-1	PT-1	PT-1	PT-1	PT-1	ACT-1	
416	STORAGE	CONC-1	RB-1	PT-1	PT-1	PT-1	PT-1	N/A	
417	JANITORS CLOSET	CONC-1	RB-1	PT-1	PT-1	PT-1	PT-1	N/A	
418	BREAK ROOM	RT-2	RB-1	PT-1	PT-1	PT-1	PT-1	ACT-1	
419	MECH / ELEC	CONC-1	RB-1	PT-1	PT-1	PT-1	PT-1	N/A	
420	BOOK DROP	CONC-1	RB-1	PT-1	PT-1	PT-1	PT-1	N/A	

ROOM SCHEDULE

Number	Name
400	VESTIBULE
401	CORRIDOR
402	MENS
403	WOMENS
404	MEETING ROOM
405	COATS
406	STORAGE
407	CHILDREN AREA
408	CIRCULATION
409	ADULT AREA
410	TEEN AREA
411	WORK ROOM
412	OFFICE
413	STUDY
414	STUDY
415	CORRIDOR
416	STORAGE
417	JANITORS CLOSET
418	BREAK ROOM
419	MECH / ELEC
420	BOOK DROP

Scenic Regional Library
read, explore, grow

SCENIC REGIONAL LIBRARY
WRIGHT CITY BRANCH
60 WILDCAT DRIVE
WRIGHT CITY, MO 63390

JEMA
SDA ARCHITECTS

ARCHITECT-OF-RECORD
JEMA
3005 LOCUST ST.
ST. LOUIS, MO 63103
T (314) 531-7400
CONTACT: SCOTT CLARK
E-MAIL: SCLARK@JEMASTL.COM

DESIGN ARCHITECT
SAPP DESIGN ASSOCIATES ARCHITECTS
3750 SOUTH FREMONT
SPRINGFIELD, MO 65804
T (417) 877-9600
F (417) 877-9696
CONTACT: JAMES STUFFLEBEAM
E: STUFFLEBEAM@SDAARCHITECTS.COM

CIVIL
COCHRAN
530A E. INDEPENDENCE DRIVE
UNION, MO 63084
CONTACT: DAVE VAN LEER
T (636) 584-0540
F (636) 584-0512
E-MAIL: DVANLEER@COCHRAN.COM

STRUCTURAL
ALPER AUDI, INC.
1804 BORMAN CIRCLE DRIVE
ST. LOUIS, MO 63146
T (314) 432-8600
F (314) 807-2774
CONTACT: STEVE EHRETT
E-MAIL: STEVE.EHRETT@ALPERAUDI.COM

MECHANICAL, ELECTRICAL, PLUMBING
BRIC PARTNERSHIP, LLC
343 S. KIRKWOOD ROAD, SUITE 204
KIRKWOOD, MO 63122
T (314) 725-5889
CONTACT: BRUCE COLEMAN
E: BCOLEMAN@BRICPARTNERSHIP.COM

ARCHITECT OF RECORD:

JOHN EDWARD MUELLER
MO ARCHITECTURAL LICENSE A2010039554
MO CERTIFICATE OF AUTHORITY A2014008380

No.	Date	Description
	06/13/17	ISSUED FOR RE-BID

DRAWN BY: **SC/SH**

PROJECT NUMBER: **16-1161.03**

SHEET TITLE:
FINISH PLAN / LEGEND

A-501

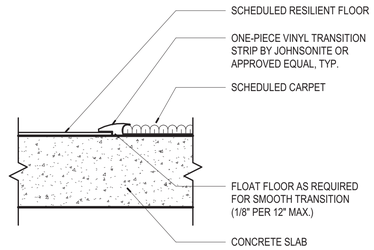

2 A-502 TRANSITION - RESILIENT FLOOR TO CARPET
3" = 1'-0"

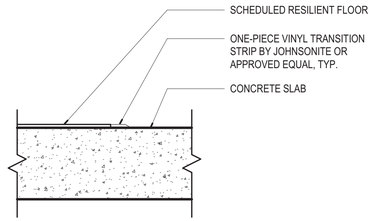

3 A-502 TRANSITION - RESILIENT FLOOR TO CONC.
3" = 1'-0"

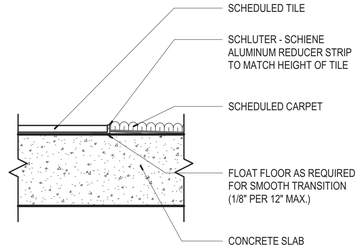

4 A-502 TRANSITION - TILE TO CARPET
3" = 1'-0"

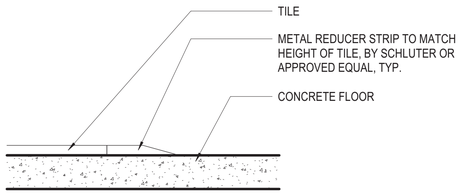

6 A-502 TRANSITION - TILE TO CONC.
12" = 1'-0"

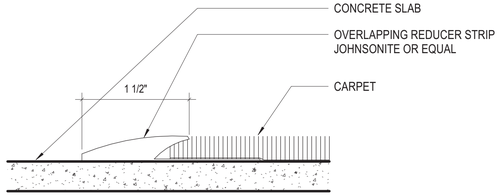

7 A-502 TRANSITION - CONC. TO CPT
12" = 1'-0"

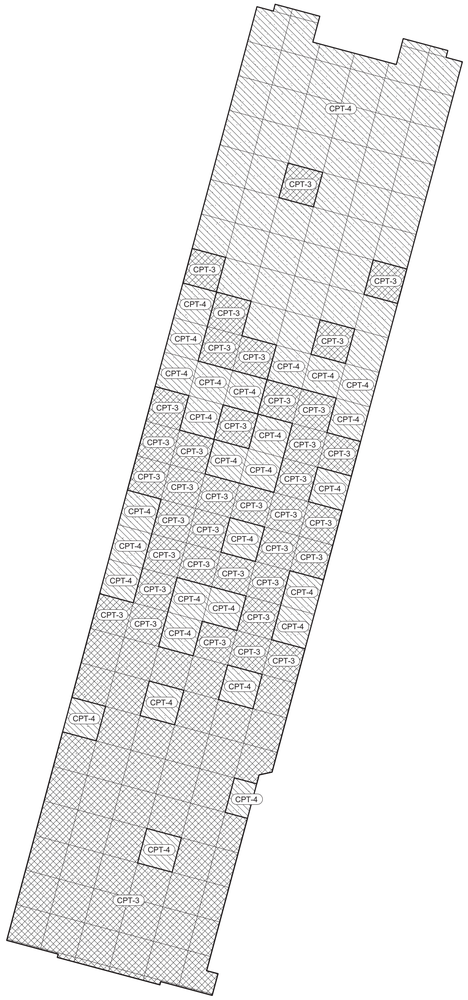

9 A-502 CARPET LAYOUT @ ADULTS AREA
1/4" = 1'-0"

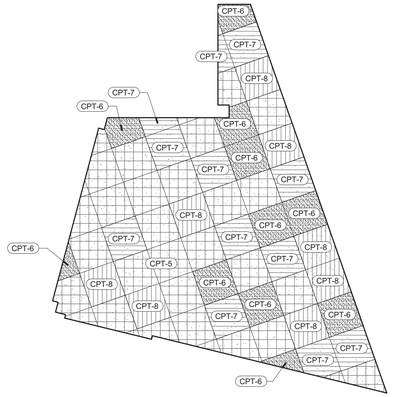

10 A-502 CARPET LAYOUT @ CHILDREN'S AREA
1/4" = 1'-0"

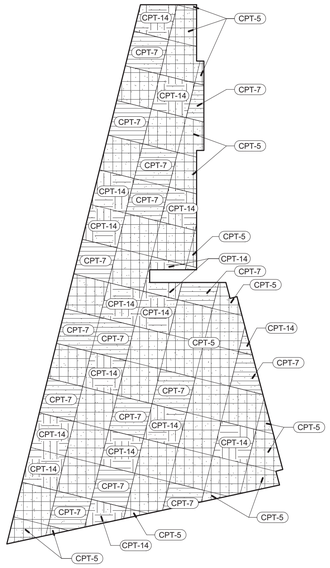

11 A-502 CARPET LAYOUT @ TEENS AREA
1/4" = 1'-0"

Scenic Regional Library
read, explore, grow

SCENIC REGIONAL LIBRARY
WRIGHT CITY BRANCH
60 WILDCAT DRIVE
WRIGHT CITY, MO 63390

JEMA
SDA ARCHITECTS

ARCHITECT-OF-RECORD
JEMA
3005 LOCUST ST.
ST. LOUIS, MO 63103
T (314) 531-7400
CONTACT: SCOTT CLARK
E-MAIL: SCLARK@JEMASTL.COM

DESIGN ARCHITECT
SAPP DESIGN ASSOCIATES ARCHITECTS
3750 SOUTH FREMONT
SPRINGFIELD, MO 65804
T (417) 877-9600
F (417) 877-9696
CONTACT: JAMES STUFFLEBEAM
E: STUFFLEBEAM@SDAARCHITECTS.COM

CIVIL
COCHRAN
530A E. INDEPENDENCE DRIVE
UNION, MO 63084
CONTACT: DAVE VAN LEER
T (636) 584-0540
F (636) 584-0512
E-MAIL: DVANLEER@COCHRAN.COM

STRUCTURAL
ALPER AUDI, INC.
1804 BORMAN CIRCLE DRIVE
ST. LOUIS, MO 63146
T (314) 432-8600
F (314) 807-2774
CONTACT: STEVE EHRETT
E-MAIL: STEVE.EHRETT@ALPERAUDI.COM

MECHANICAL, ELECTRICAL, PLUMBING
BRIC PARTNERSHIP, LLC
343 S. KIRKWOOD ROAD, SUITE 204
KIRKWOOD, MO 63122
T (314) 725-5889
CONTACT: BRUCE COLEMAN
E: BCOLEMAN@BRICPARTNERSHIP.COM

ARCHITECT OF RECORD:

JOHN EDWARD MUELLER
MO ARCHITECTURAL LICENSE A2010039554
MO CERTIFICATE OF AUTHORITY A2014008380

No.	Date	Description
	06/13/17	ISSUED FOR RE-BID

DRAWN BY: **Author**

PROJECT NUMBER: **16-1161.03**

SHEET TITLE:
ENLARGED FINISH PLANS

A-502

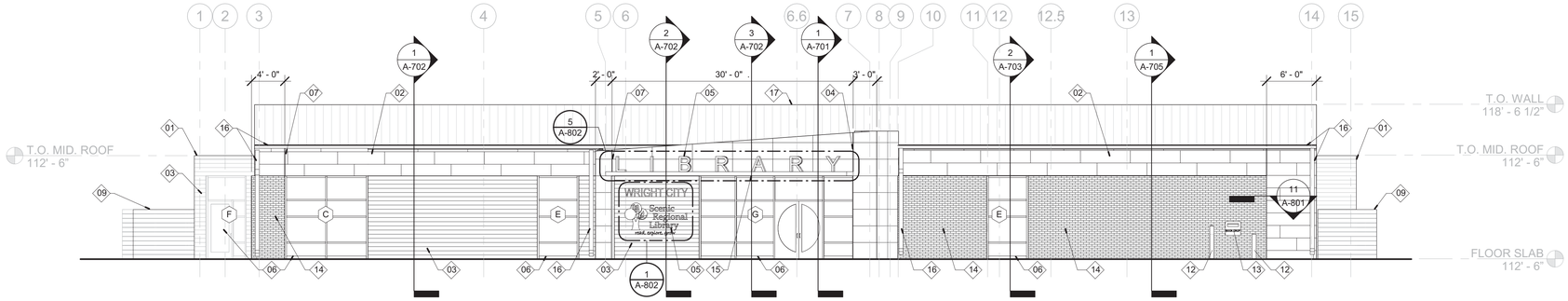

1 A-601 EAST ELEVATION
1/8" = 1'-0"

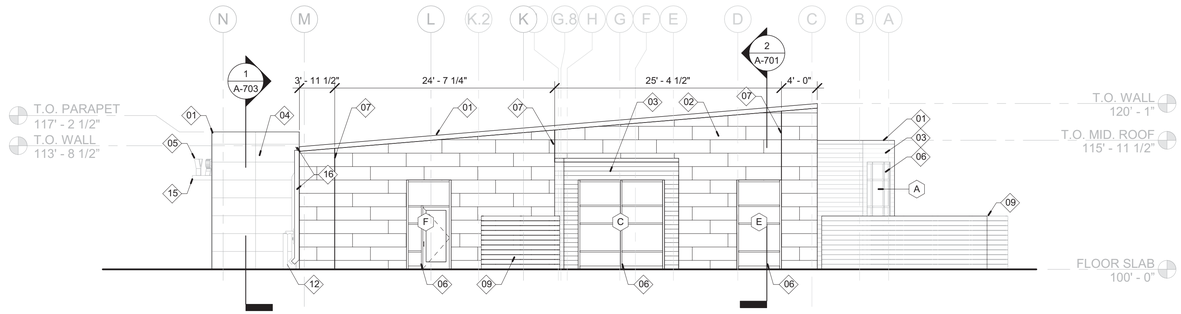

2 A-601 NORTH ELEVATION
1/8" = 1'-0"

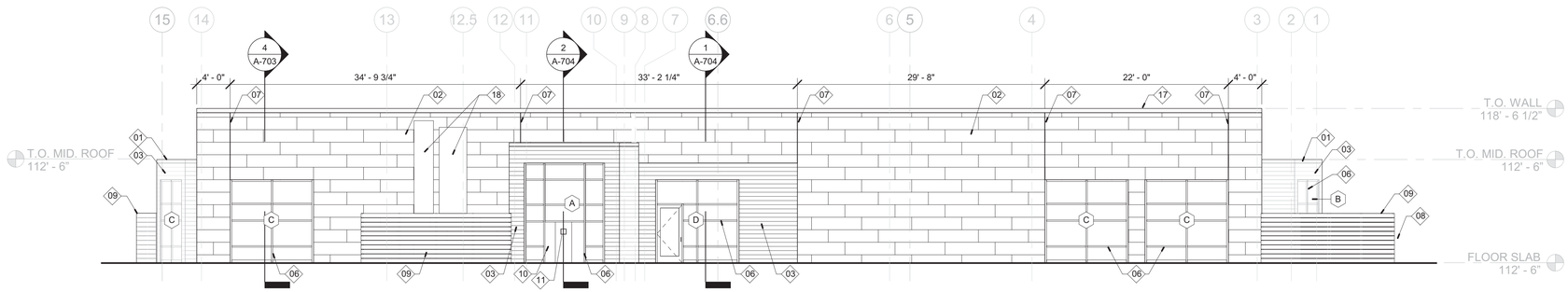

3 A-601 WEST ELEVATION
1/8" = 1'-0"

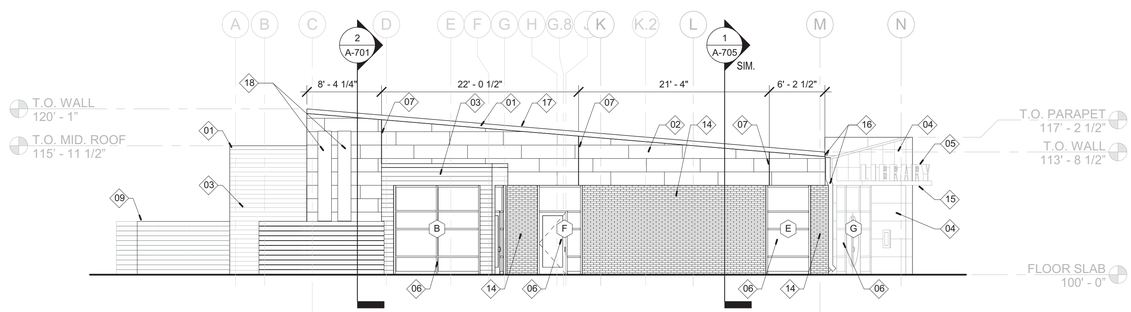

4 A-601 SOUTH ELEVATION
1/8" = 1'-0"

KEYED NOTES - EXTERIOR ELEVATIONS

01	PRE-FINISHED METAL COPING.
02	HORIZONTAL HARDI-PANEL CEMENT FIBER BOARD PANEL W/ 1/3 OFFSET LAYOUT AND TRIM EXTRUSIONS, TYP. PANEL SIZE 18" X 72"- REFER TO SPECIFICATIONS.
03	PRE-FINISHED EXTRUDED ALUMINUM SIDING - REFER TO SPECIFICATIONS.
04	HORIZONTAL HARDI-PANEL CEMENT FIBER BOARD PANEL W/ STACK BOND LAYOUT AND TRIM EXTRUSIONS, TYP. PANEL SIZE 24" X 60"- REFER TO SPECIFICATIONS.
05	BUILDING SIGNAGE - REFER TO SPECS. FOR MORE INFORMATION.
06	PRE-FINISHED ALUM. STOREFRONT - REFER TO SPECIFICATIONS FOR MORE INFORMATION.
07	VERTICAL CONTR JOINT - REFER TO SPECIFICATIONS FOR MORE INFORMATION.
08	NOT USED
09	MECHANICAL SCREEN FENCING - REFER TO SPECIFICATIONS AND DETAILS.
10	VERTICAL CEMENT FIBER BOARD PANEL LAYOUT - REFER TO SPECIFICATIONS. [FCP-1]
11	GAS FIREPLACE VENT CAP - REFER TO SPECIFICATIONS.
12	TRAFFIC CONTROL BOLLARDS - REFER TO CIVIL DWGS. FOR MORE INFORMATION.
13	THROUGH-WALL BOOK RETURN UNIT - REFER TO SPECIFICATIONS.
14	3-5/8" BRICK VENEER - REFER TO SPECIFICATIONS.
15	COMPOSITE METAL PANEL WRAPPED CANOPY - REFER TO SPECIFICATIONS.
16	PRE-FINISHED METAL GUTTER & DOWNSPOUT, REFER TO CIVIL DRAWINGS.
17	DECOR' SIMULATED METAL ROOF, MEMBRANE ROOF SYSTEM, REFER TO SPECS.
18	PAINT ALL EXPOSED EXTERIOR DUCTWORK TO MATCH WALL PANEL COLOR.

Scenic Regional Library
read, explore, grow

SCENIC REGIONAL LIBRARY
WRIGHT CITY BRANCH
60 WILDCAT DRIVE
WRIGHT CITY, MO 63390

JEMA
SDA ARCHITECTS

ARCHITECT-OF-RECORD
JEMA
3005 LOCUST ST.
ST. LOUIS, MO 63103
T (314) 531-7400
CONTACT: SCOTT CLARK
E-MAIL: SCLARK@JEMASTL.COM

DESIGN ARCHITECT
SAPP DESIGN ASSOCIATES ARCHITECTS
3750 SOUTH FREMONT
SPRINGFIELD, MO 65804
T (417) 877-9600
F (417) 877-9696
CONTACT: JAMES STUFFLEBEAM
E: STUFFLEBEAM@SDAARCHITECTS.COM

CIVIL
COCHRAN
530A E. INDEPENDENCE DRIVE
UNION, MO 63084
CONTACT: DAVE VAN LEER
T (636) 584-0540
F (636) 584-0512
E-MAIL: DVANLEER@COCHRAN.COM

STRUCTURAL
ALPER AUDI, INC.
1804 BORMAN CIRCLE DRIVE
ST. LOUIS, MO 63146
T (314) 432-8600
F (314) 807-2774
CONTACT: STEVE EHRETT
E-MAIL: STEVE.EHRETT@ALPERAUDI.COM

MECHANICAL, ELECTRICAL, PLUMBING
BRIC PARTNERSHIP, LLC
343 S. KIRKWOOD ROAD, SUITE 204
KIRKWOOD, MO 63122
T (314) 725-5889
CONTACT: BRUCE COLEMAN
E: BCOLEMAN@BRICPARTNERSHIP.COM

ARCHITECT OF RECORD:

JOHN EDWARD MUELLER
MO ARCHITECTURAL LICENSE A2010039554
MO CERTIFICATE OF AUTHORITY A2014008380

No.	Date	Description
	06/13/17	ISSUED FOR RE-BID

DRAWN BY: **SC/SH**

PROJECT NUMBER: **16-1161.03**

SHEET TITLE:
ELEVATIONS - EXTERIOR

A-601

1 A-602 COLLECTION - STUDY ROOMS
3/8" = 1'-0" REFERENCE 1 /A-201

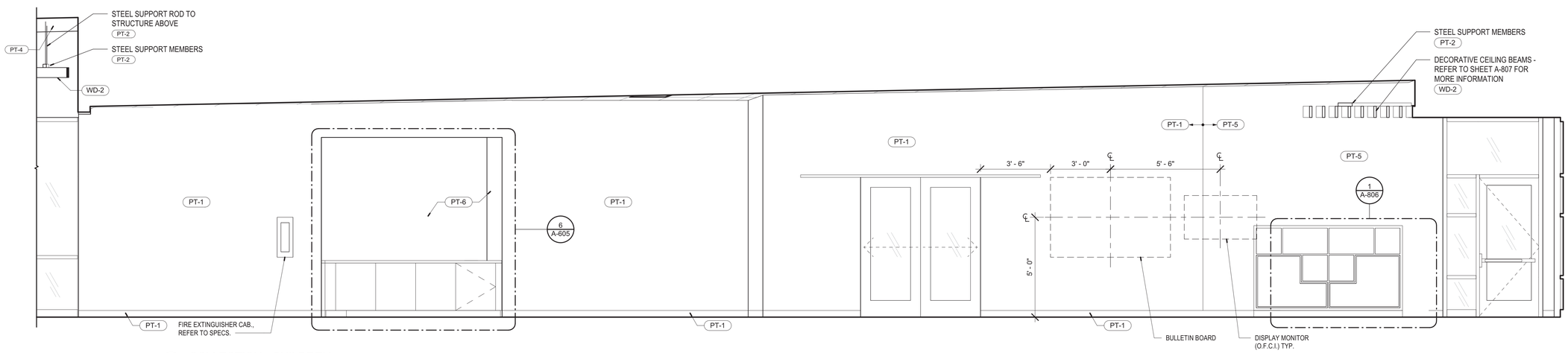

2 A-602 COLLECTION - CHILDREN
3/8" = 1'-0" REFERENCE 1 /A-201

Scenic Regional Library
read, explore, grow

SCENIC REGIONAL LIBRARY
WRIGHT CITY BRANCH
60 WILDCAT DRIVE
WRIGHT CITY, MO 63390

JEMA
SDA ARCHITECTS

ARCHITECT-OF-RECORD
JEMA
3005 LOCUST ST.
ST. LOUIS, MO 63103
T (314) 531-7400
CONTACT: SCOTT CLARK
E-MAIL: SCLARK@JEMASTL.COM

DESIGN ARCHITECT
SAPP DESIGN ASSOCIATES ARCHITECTS
3750 SOUTH FREMONT
SPRINGFIELD, MO 65804
T (417) 877-9600
F (417) 877-9696
CONTACT: JAMES STUFFLEBEAM
E: STUFFLEBEAM@SDAARCHITECTS.COM

CIVIL
COCHRAN
530A E. INDEPENDENCE DRIVE
UNION, MO 63084
CONTACT: DAVE VAN LEER
T (636) 584-0540
F (636) 584-0512
E-MAIL: DVANLEER@COCHRAN.COM

STRUCTURAL
ALPER AUDI, INC.
1804 BORMAN CIRCLE DRIVE
ST. LOUIS, MO 63146
T (314) 432-8600
F (314) 807-2774
CONTACT: STEVE EHRETT
E-MAIL: STEVE.EHRETT@ALPERAUDI.COM

MECHANICAL, ELECTRICAL, PLUMBING
BRIC PARTNERSHIP, LLC
343 S. KIRKWOOD ROAD, SUITE 204
KIRKWOOD, MO 63122
T (314) 725-5889
CONTACT: BRUCE COLEMAN
E: BCOLEMAN@BRICPARTNERSHIP.COM

ARCHITECT OF RECORD:

JOHN EDWARD MUELLER
MO ARCHITECTURAL LICENSE A2010039554
MO CERTIFICATE OF AUTHORITY A2014008380

No.	Date	Description
	06/13/17	ISSUED FOR RE-BID

DRAWN BY: **SC/SH**

PROJECT NUMBER: **16-1161.03**

SHEET TITLE:
ELEVATIONS - INTERIOR

A-602

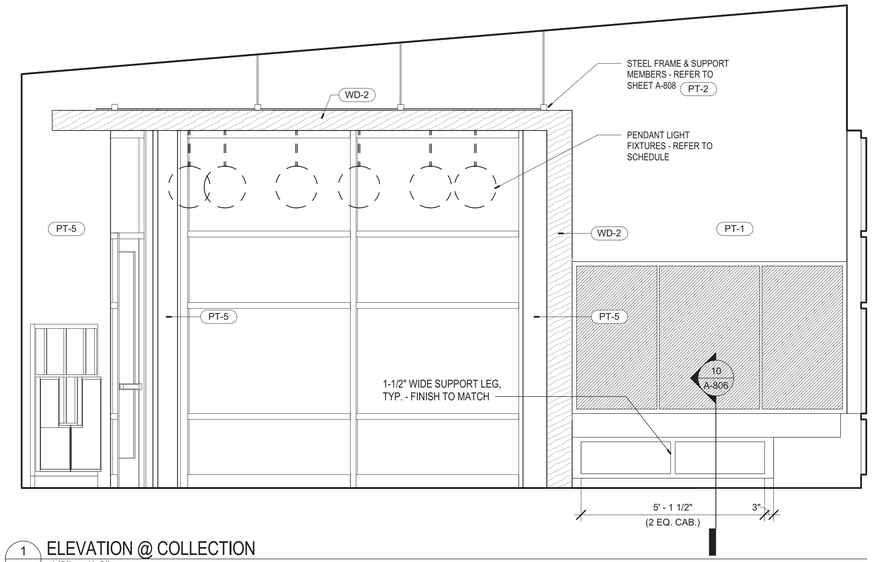

1 A-603 ELEVATION @ COLLECTION
1/2" = 1'-0"

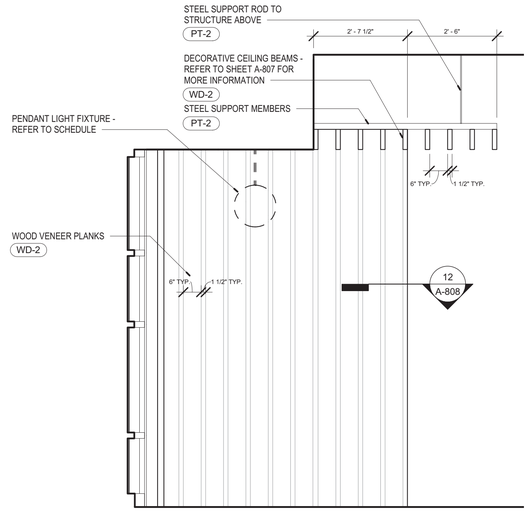

3 A-603 ELEVATION @ CHILDREN
1/2" = 1'-0"

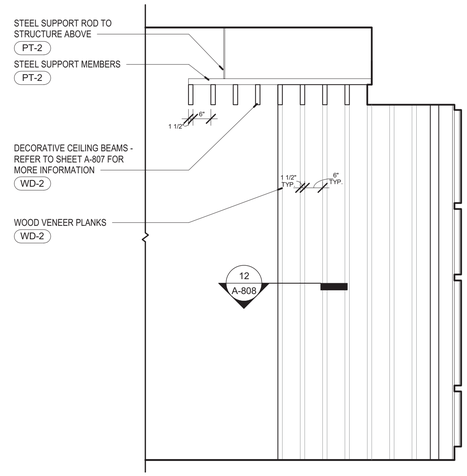

4 A-603 ELEVATION @ CHILDREN
1/2" = 1'-0"

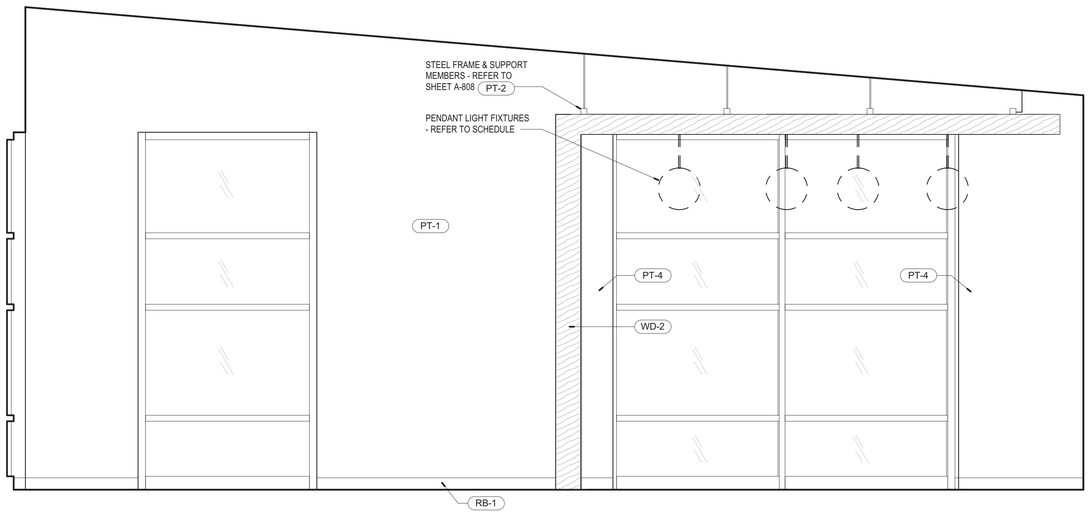

5 A-603 ELEVATION @ COLLECTION
1/2" = 1'-0"

Scenic Regional Library
read, explore, grow

SCENIC REGIONAL LIBRARY
WRIGHT CITY BRANCH
60 WILDCAT DRIVE
WRIGHT CITY, MO 63390

JEMA
SDA ARCHITECTS

ARCHITECT-OF-RECORD
JEMA
3005 LOCUST ST.
ST. LOUIS, MO 63103
T (314) 531-7400
CONTACT: SCOTT CLARK
E-MAIL: SCLARK@JEMASTL.COM

DESIGN ARCHITECT
SAPP DESIGN ASSOCIATES ARCHITECTS
3750 SOUTH FREMONT
SPRINGFIELD, MO 65804
T (417) 877-9600
F (417) 877-9696
CONTACT: JAMES STUFFLEBEAM
E: STUFFLEBEAM@SDAARCHITECTS.COM

CIVIL
COCHRAN
530A E. INDEPENDENCE DRIVE
UNION, MO 63084
CONTACT: DAVE VAN LEER
T (636) 584-0540
F (636) 584-0512
E-MAIL: DVANLEER@COCHRAN.COM

STRUCTURAL
ALPER AUDI, INC.
1804 BORMAN CIRCLE DRIVE
ST. LOUIS, MO 63146
T (314) 432-8600
F (314) 807-2774
CONTACT: STEVE EHRETT
E-MAIL: STEVE.EHRETT@ALPERAUDI.COM

MECHANICAL, ELECTRICAL, PLUMBING
BRIC PARTNERSHIP, LLC
343 S. KIRKWOOD ROAD, SUITE 204
KIRKWOOD, MO 63122
T (314) 725-5889
CONTACT: BRUCE COLEMAN
E: BCOLEMAN@BRICPARTNERSHIP.COM

ARCHITECT OF RECORD:

JOHN EDWARD MUELLER
MO ARCHITECTURAL LICENSE A2010039554
MO CERTIFICATE OF AUTHORITY A2014008380

No.	Date	Description
	06/13/17	ISSUED FOR RE-BID

DRAWN BY: **SC/SH**

PROJECT NUMBER: **16-1161.03**

SHEET TITLE:
ELEVATIONS - INTERIOR

A-603

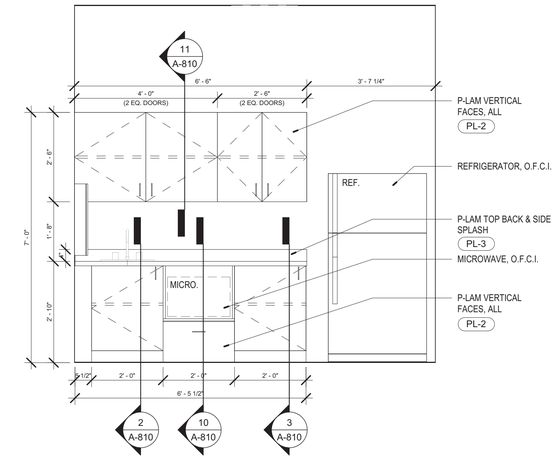

1 A-604 ELEVATION @ BREAK ROOM
1/2" = 1'-0" REFERENCE 6 /A-302

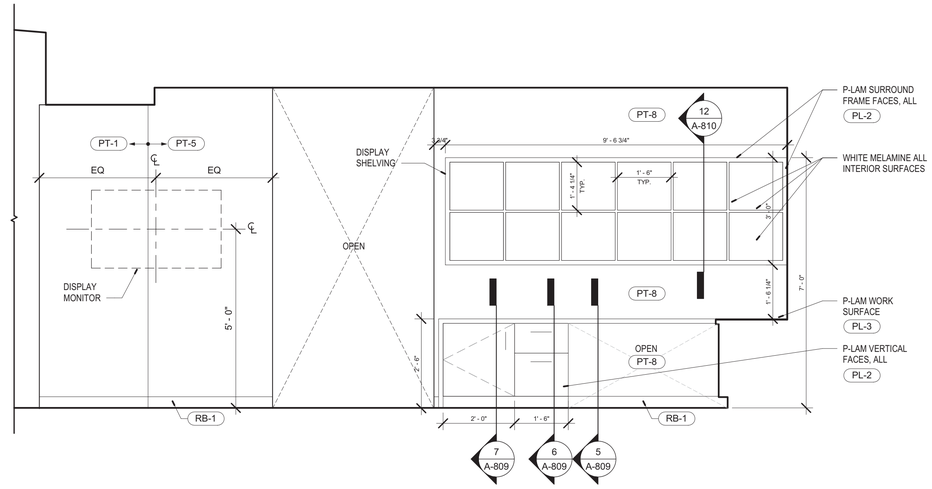

2 A-604 ELEVATION @CIRCULATION DESK
1/2" = 1'-0" REFERENCE 1 /A-302

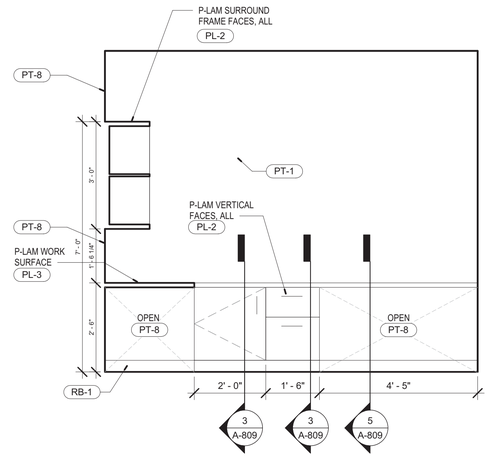

3 A-604 ELEVATION @CIRCULATION DESK
1/2" = 1'-0" REFERENCE 1 /A-302

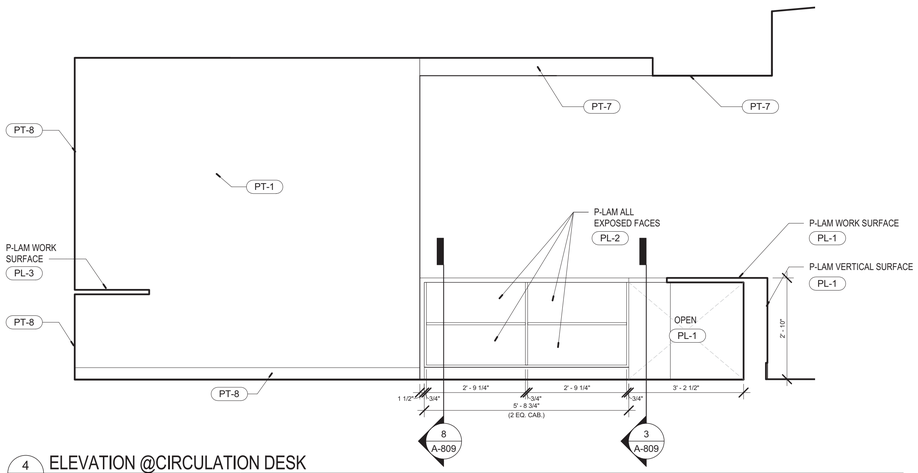

4 A-604 ELEVATION @CIRCULATION DESK
1/2" = 1'-0" REFERENCE 1 /A-302

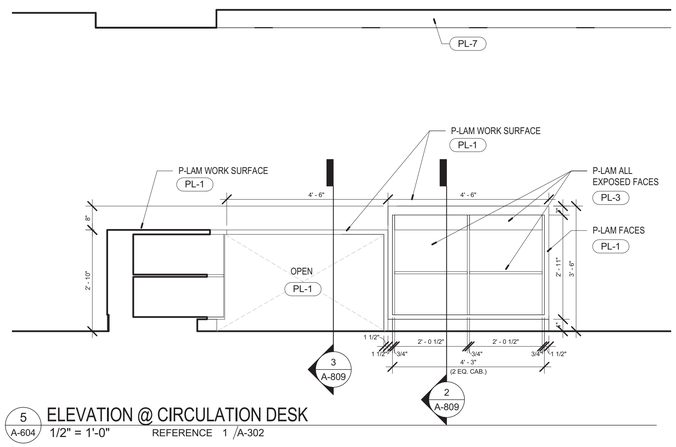

5 A-604 ELEVATION @ CIRCULATION DESK
1/2" = 1'-0" REFERENCE 1 /A-302

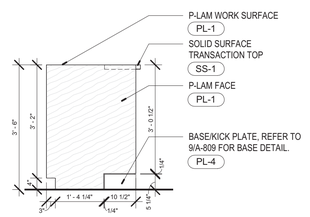

6 A-604 ELEVATION @CIRCULATION DESK
1/2" = 1'-0" REFERENCE 1 /A-302

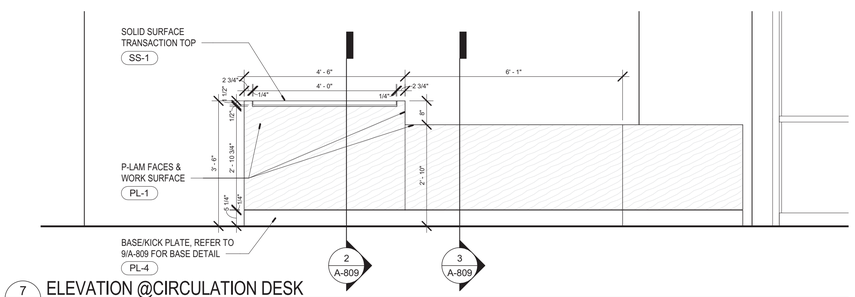

7 A-604 ELEVATION @CIRCULATION DESK
1/2" = 1'-0" REFERENCE 1 /A-302

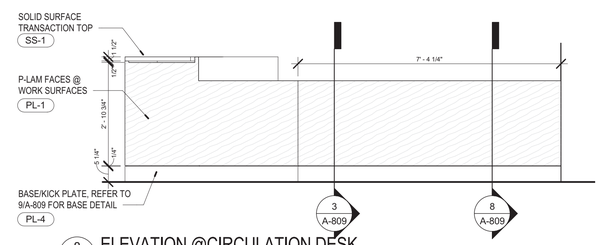

8 A-604 ELEVATION @CIRCULATION DESK
1/2" = 1'-0" REFERENCE 1 /A-302

Scenic Regional Library
read, explore, grow

SCENIC REGIONAL LIBRARY
WRIGHT CITY BRANCH
60 WILDCAT DRIVE
WRIGHT CITY, MO 63390

JEMA
SDA ARCHITECTS

ARCHITECT-OF-RECORD
JEMA
3005 LOCUST ST.
ST. LOUIS, MO 63103
T (314) 531-7400
CONTACT: SCOTT CLARK
E-MAIL: SCLARK@JEMASTL.COM

DESIGN ARCHITECT
SAPP DESIGN ASSOCIATES ARCHITECTS
3750 SOUTH FREMONT
SPRINGFIELD, MO 65804
T (417) 877-9600
F (417) 877-9696
CONTACT: JAMES STUFFLEBEAM
E: STUFFLEBEAM@SDAARCHITECTS.COM

CIVIL
COCHRAN
530A E. INDEPENDENCE DRIVE
UNION, MO 63084
CONTACT: DAVE VAN LEER
T (636) 584-0540
F (636) 584-0512
E-MAIL: DVANLEER@COCHRAN.COM

STRUCTURAL
ALPER AUDI, INC.
1804 BORMAN CIRCLE DRIVE
ST. LOUIS, MO 63146
T (314) 432-8600
F (314) 807-2774
CONTACT: STEVE EHRETT
E-MAIL: STEVE.EHRETT@ALPERAUDI.COM

MECHANICAL, ELECTRICAL, PLUMBING
BRIC PARTNERSHIP, LLC
343 S. KIRKWOOD ROAD, SUITE 204
KIRKWOOD, MO 63122
T (314) 725-5889
CONTACT: BRUCE COLEMAN
E: BCOLEMAN@BRICPARTNERSHIP.COM

ARCHITECT OF RECORD:

JOHN EDWARD MUELLER
MO ARCHITECTURAL LICENSE A2010039554
MO CERTIFICATE OF AUTHORITY A2014008380

No.	Date	Description
	06/13/17	ISSUED FOR RE-BID

DRAWN BY: **SC/SH**

PROJECT NUMBER: **16-1161.03**

SHEET TITLE:
ELEVATIONS - INTERIOR

A-604

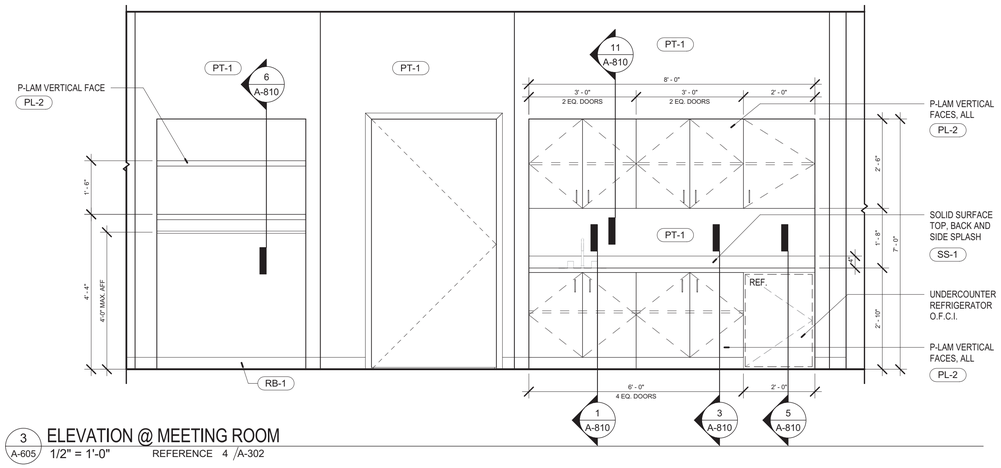

3 A-605 ELEVATION @ MEETING ROOM
1/2" = 1'-0" REFERENCE 4 /A-302

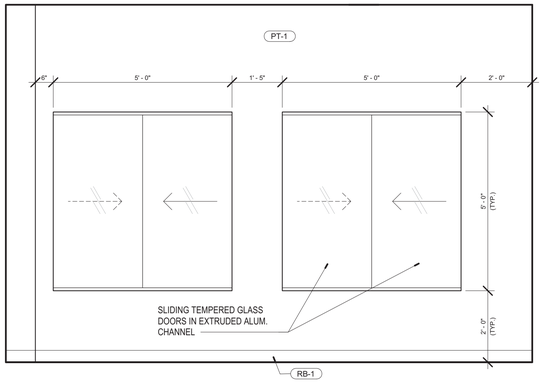

4 A-605 ELEVATION @ DISPLAY CABINET
1/2" = 1'-0" REFERENCE 1 /A-201

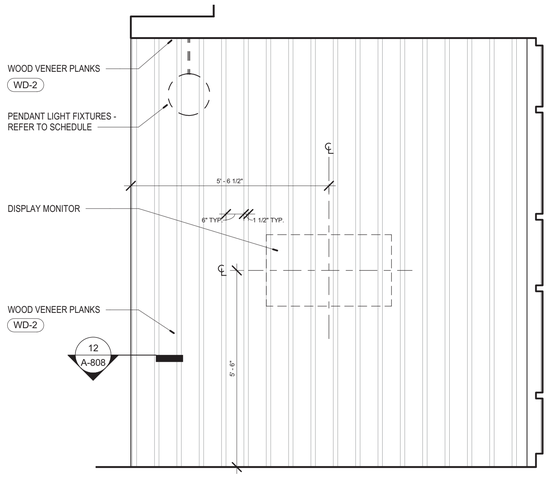

1 A-605 ELEVATION @ ADULTS SIDE WALL
1/2" = 1'-0" REFERENCE 5 /A-302

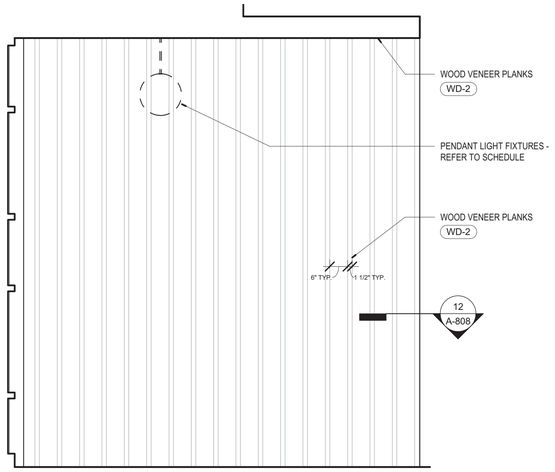

2 A-605 ELEVATION @ ADULTS SIDE WALL
1/2" = 1'-0" REFERENCE 5 /A-302

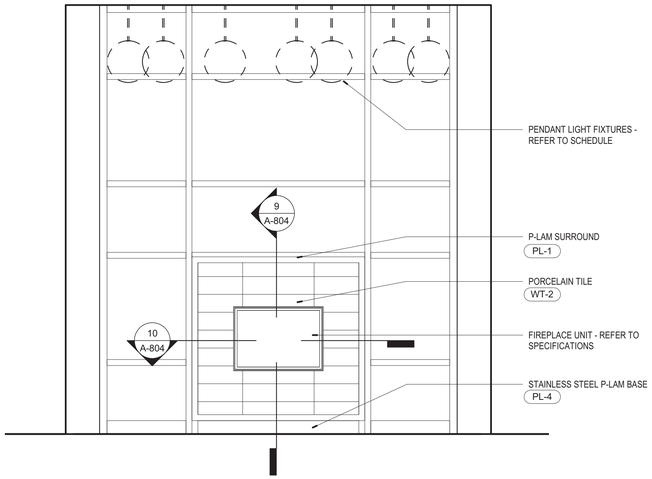

5 A-605 ELEVATION @ FIREPLACE
1/2" = 1'-0" REFERENCE 5 /A-302

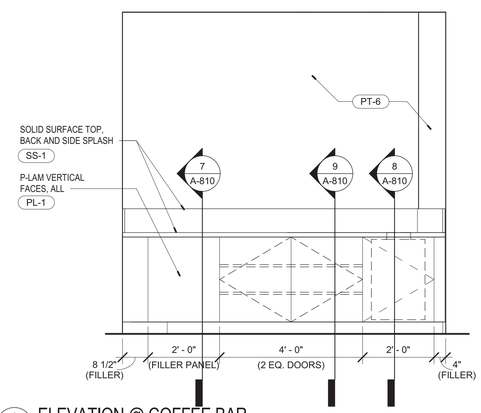

6 A-605 ELEVATION @ COFFEE BAR
1/2" = 1'-0" REFERENCE 2 /A-602

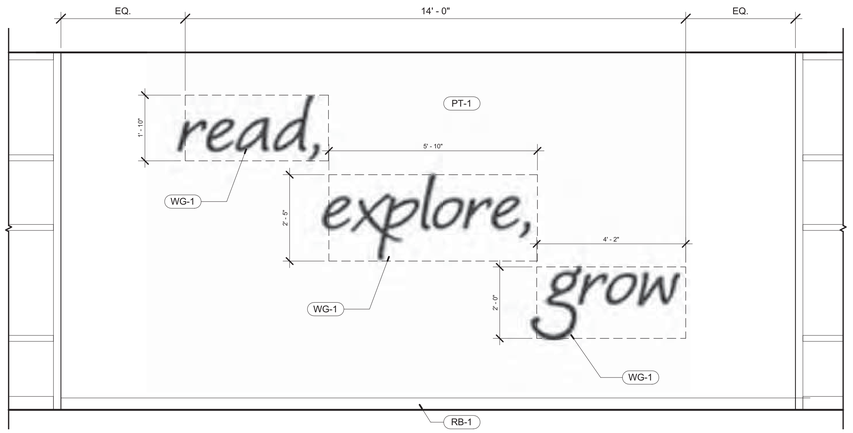

7 A-605 MEETING ROOM GRAPHIC
1/2" = 1'-0" REFERENCE 1 /A-201

Scenic Regional Library
read, explore, grow

SCENIC REGIONAL LIBRARY
WRIGHT CITY BRANCH
60 WILDCAT DRIVE
WRIGHT CITY, MO 63390

JEMA
SDA ARCHITECTS

ARCHITECT-OF-RECORD
JEMA
3005 LOCUST ST.
ST. LOUIS, MO 63103
T (314) 531-7400
CONTACT: SCOTT CLARK
E-MAIL: SCLARK@JEMASTL.COM

DESIGN ARCHITECT
SAPP DESIGN ASSOCIATES ARCHITECTS
3750 SOUTH FREMONT
SPRINGFIELD, MO 65804
T (417) 877-9600
F (417) 877-9696
CONTACT: JAMES STUFFLEBEAM
E: STUFFLEBEAM@SDAARCHITECTS.COM

CIVIL
COCHRAN
530A E. INDEPENDENCE DRIVE
UNION, MO 63084
CONTACT: DAVE VAN LEER
T (636) 584-0540
F (636) 584-0512
E-MAIL: DVANLEER@COCHRAN.COM

STRUCTURAL
ALPER AUDI, INC.
1804 BORMAN CIRCLE DRIVE
ST. LOUIS, MO 63146
T (314) 432-8600
F (314) 807-2774
CONTACT: STEVE EHRETT
E-MAIL: STEVE.EHRETT@ALPERAUDI.COM

MECHANICAL, ELECTRICAL, PLUMBING
BRIC PARTNERSHIP, LLC
343 S. KIRKWOOD ROAD, SUITE 204
KIRKWOOD, MO 63122
T (314) 725-5889
CONTACT: BRUCE COLEMAN
E: BCOLEMAN@BRICPARTNERSHIP.COM

ARCHITECT OF RECORD:

JOHN EDWARD MUELLER
MO ARCHITECTURAL LICENSE A2010039554
MO CERTIFICATE OF AUTHORITY A2014008380

No.	Date	Description
	06/13/17	ISSUED FOR RE-BID

DRAWN BY: **SC/SH**

PROJECT NUMBER: **16-1161.03**

SHEET TITLE:
ELEVATIONS - INTERIOR

A-605

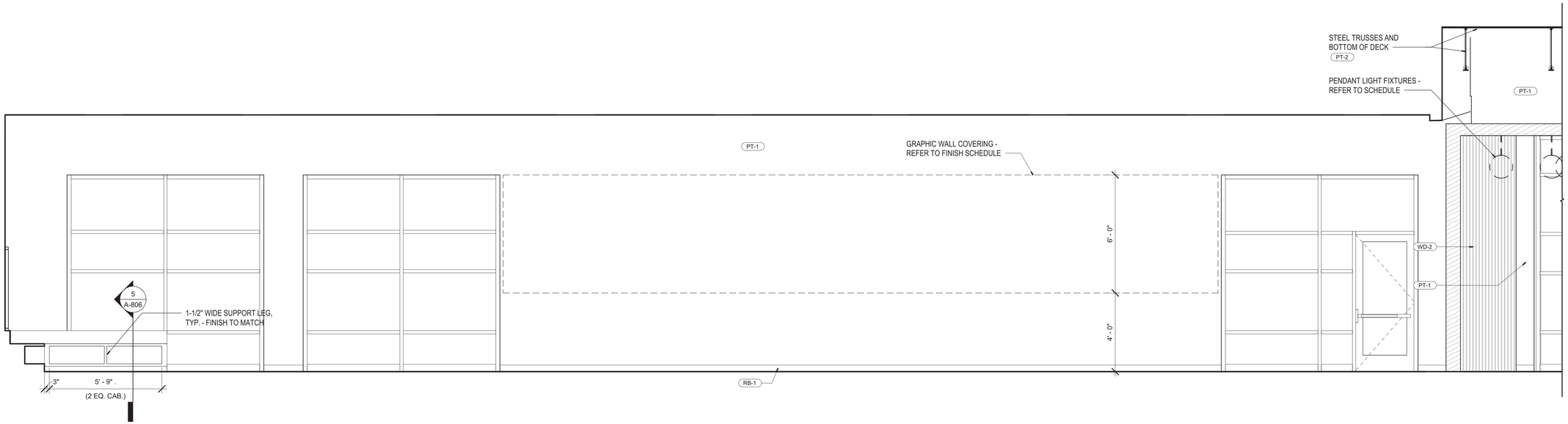

1 A-606 COLLECTION - WEST
3/8" = 1'-0"

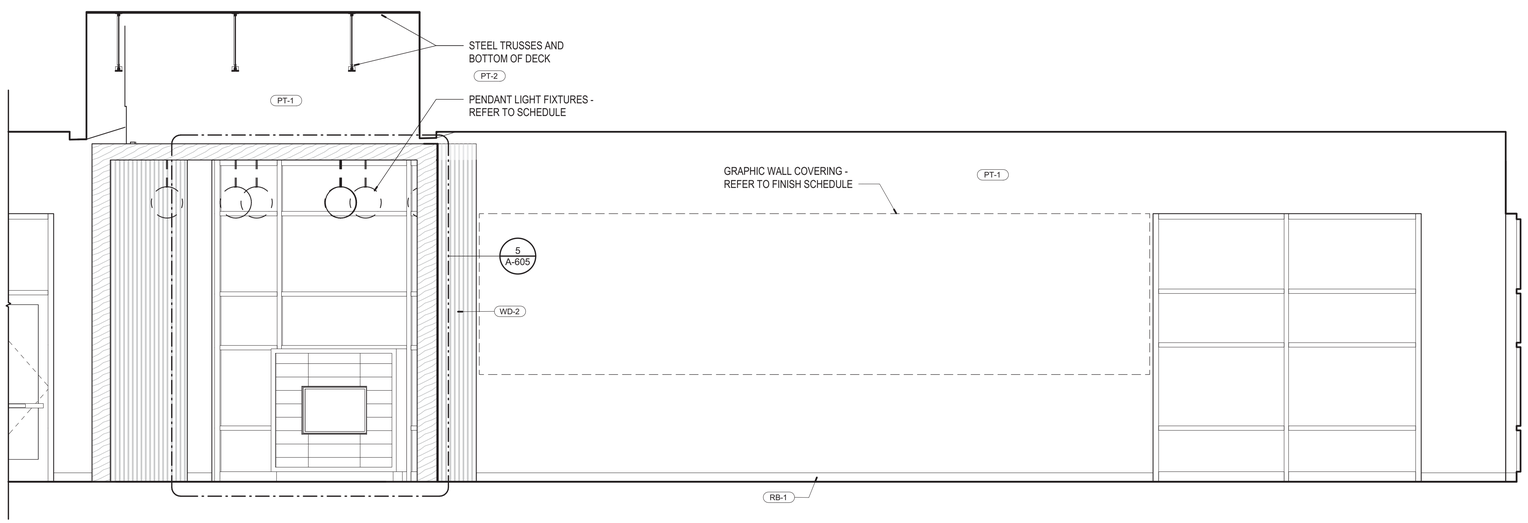

2 A-606 COLLECTION - WEST
3/8" = 1'-0"

Scenic Regional Library
read, explore, grow

SCENIC REGIONAL LIBRARY
WRIGHT CITY BRANCH
60 WILDCAT DRIVE
WRIGHT CITY, MO 63390

JEMA
SDA ARCHITECTS

ARCHITECT-OF-RECORD
JEMA
3005 LOCUST ST.
ST. LOUIS, MO 63103
T (314) 531-7400
CONTACT: SCOTT CLARK
E-MAIL: SCLARK@JEMASTL.COM

DESIGN ARCHITECT
SAPP DESIGN ASSOCIATES ARCHITECTS
3750 SOUTH FREMONT
SPRINGFIELD, MO 65804
T (417) 877-9600
F (417) 877-9696
CONTACT: JAMES STUFFLEBEAM
E: STUFFLEBEAM@SDAARCHITECTS.COM

CIVIL
COCHRAN
530A E. INDEPENDENCE DRIVE
UNION, MO 63084
CONTACT: DAVE VAN LEER
T (636) 584-0540
F (636) 584-0512
E-MAIL: DVANLEER@COCHRAN.COM

STRUCTURAL
ALPER AUDI, INC.
1804 BORMAN CIRCLE DRIVE
ST. LOUIS, MO 63146
T (314) 432-8600
F (314) 807-2774
CONTACT: STEVE EHRETT
E-MAIL: STEVE.EHRETT@ALPERAUDI.COM

MECHANICAL, ELECTRICAL, PLUMBING
BRIC PARTNERSHIP, LLC
343 S. KIRKWOOD ROAD, SUITE 204
KIRKWOOD, MO 63122
T (314) 725-5889
CONTACT: BRUCE COLEMAN
E: BCOLEMAN@BRICPARTNERSHIP.COM

ARCHITECT OF RECORD:

JOHN EDWARD MUELLER
MO ARCHITECTURAL LICENSE A2010039554
MO CERTIFICATE OF AUTHORITY A2014008380

No.	Date	Description
	06/13/17	ISSUED FOR RE-BID

DRAWN BY: **SC/SH**

PROJECT NUMBER: **16-1161.03**

SHEET TITLE:
ELEVATIONS - INTERIOR

A-606

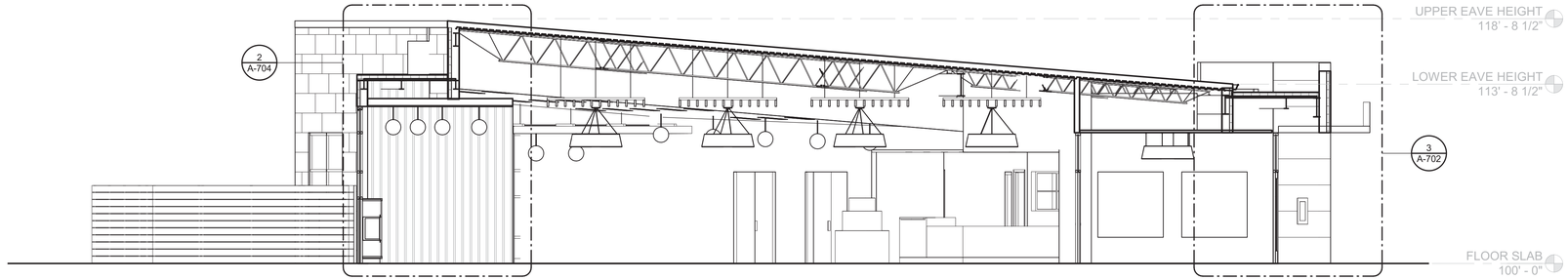

1 A-701 BUILDING CROSS SECTION
3/16" = 1'-0"

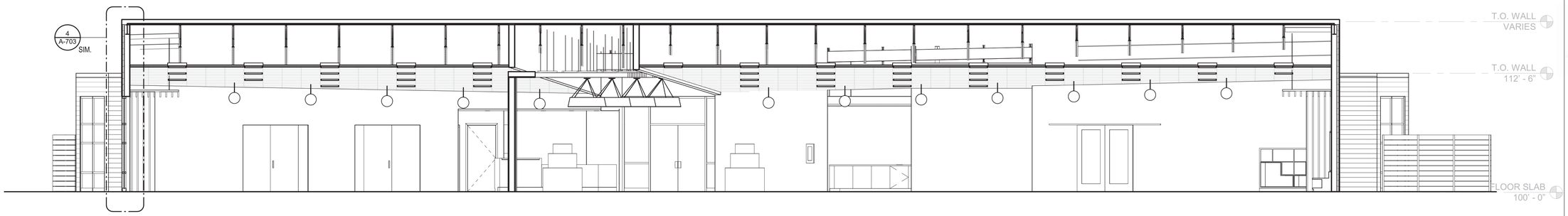

2 A-701 BUILDING CROSS SECTION
3/16" = 1'-0"

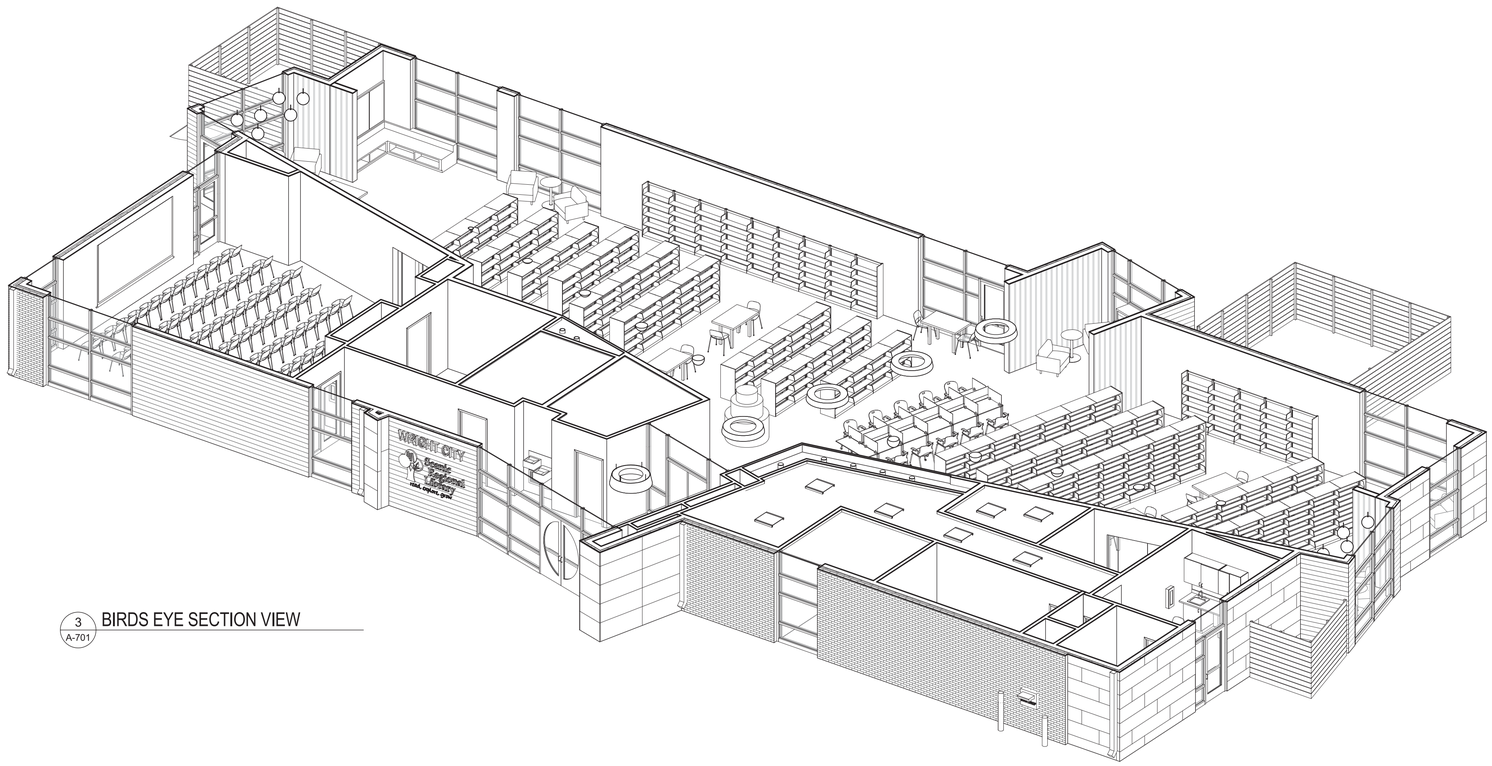

3 A-701 BIRDS EYE SECTION VIEW

Scenic Regional Library
read, explore, grow

SCENIC REGIONAL LIBRARY

WRIGHT CITY BRANCH
60 WILDCAT DRIVE
WRIGHT CITY, MO 63390

JEMA
SDA ARCHITECTS

ARCHITECT-OF-RECORD
JEMA
3005 LOCUST ST.
ST. LOUIS, MO 63103
T (314) 531-7400
CONTACT: SCOTT CLARK
E-MAIL: SCLARK@JEMASTL.COM

DESIGN ARCHITECT
SAPP DESIGN ASSOCIATES ARCHITECTS
3750 SOUTH FREMONT
SPRINGFIELD, MO 65804
T (417) 877-9600
F (417) 877-9696
CONTACT: JAMES STUFFLEBEAM
E: STUFFLEBEAM@SDAARCHITECTS.COM

CIVIL
COCHRAN
530A E. INDEPENDENCE DRIVE
UNION, MO 63084
CONTACT: DAVE VAN LEER
T (636) 584-0540
F (636) 584-0512
E-MAIL: DVANLEER@COCHRAN.COM

STRUCTURAL
ALPER AUDI, INC.
1804 BORMAN CIRCLE DRIVE
ST. LOUIS, MO 63146
T (314) 432-8600
F (314) 807-2774
CONTACT: STEVE EHRETT
E-MAIL: STEVE.EHRETT@ALPERAUDI.COM

MECHANICAL, ELECTRICAL, PLUMBING
BRIC PARTNERSHIP, LLC
343 S. KIRKWOOD ROAD, SUITE 204
KIRKWOOD, MO 63122
T (314) 725-5889
CONTACT: BRUCE COLEMAN
E: BCOLEMAN@BRICPARTNERSHIP.COM

ARCHITECT OF RECORD:

JOHN EDWARD MUELLER
MO ARCHITECTURAL LICENSE A2010039554
MO CERTIFICATE OF AUTHORITY A2014008380

No.	Date	Description
	06/13/17	ISSUED FOR RE-BID

DRAWN BY: **SC/SH**

PROJECT NUMBER: **16-1161.03**

SHEET TITLE:
BUILDING SECTIONS & BIRDS EYE SECTION VIEW

A-701

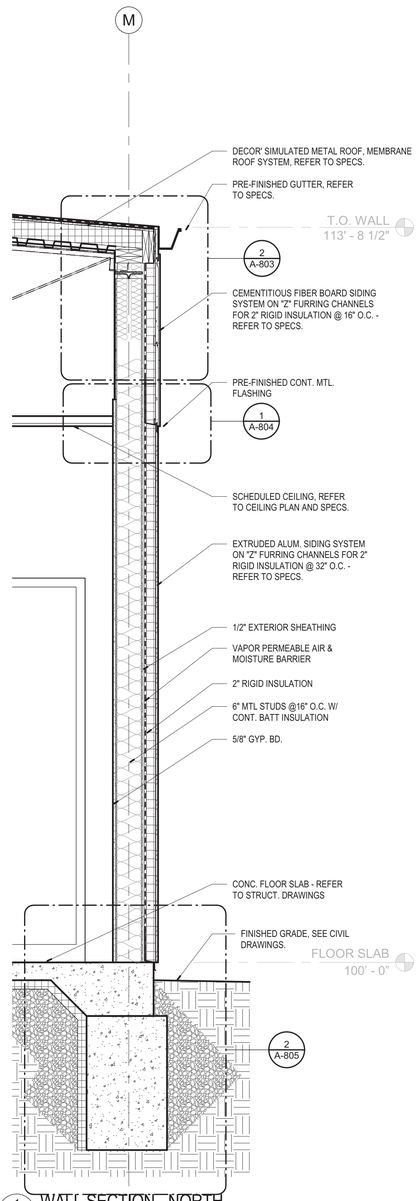

1 A-702 WALL SECTION - NORTH
3/4" = 1'-0"

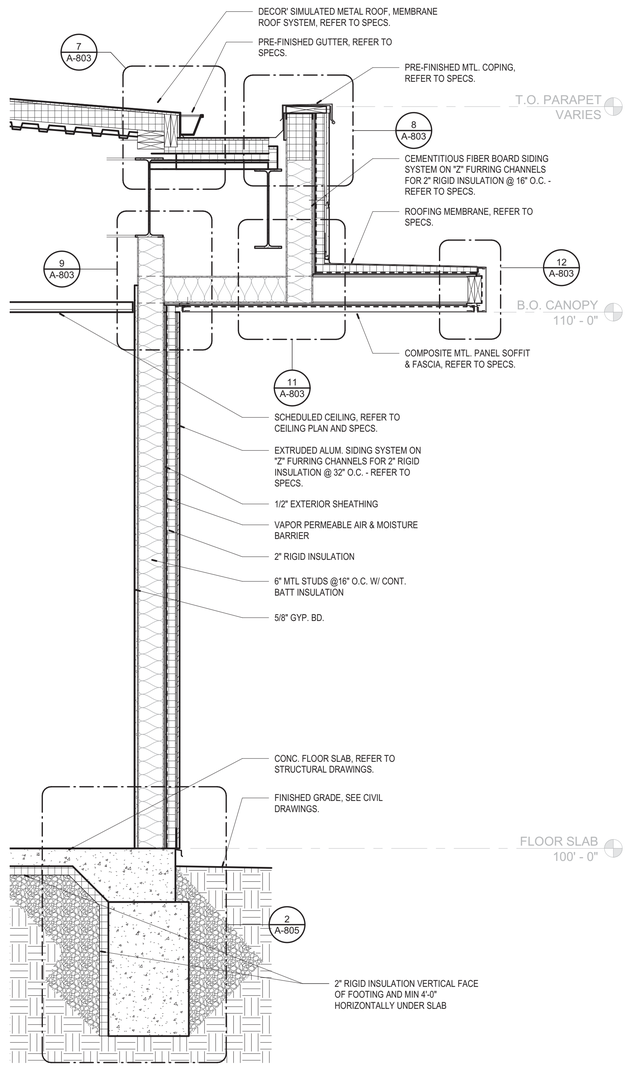

2 A-702 WALL SECTION - NORTH
3/4" = 1'-0"

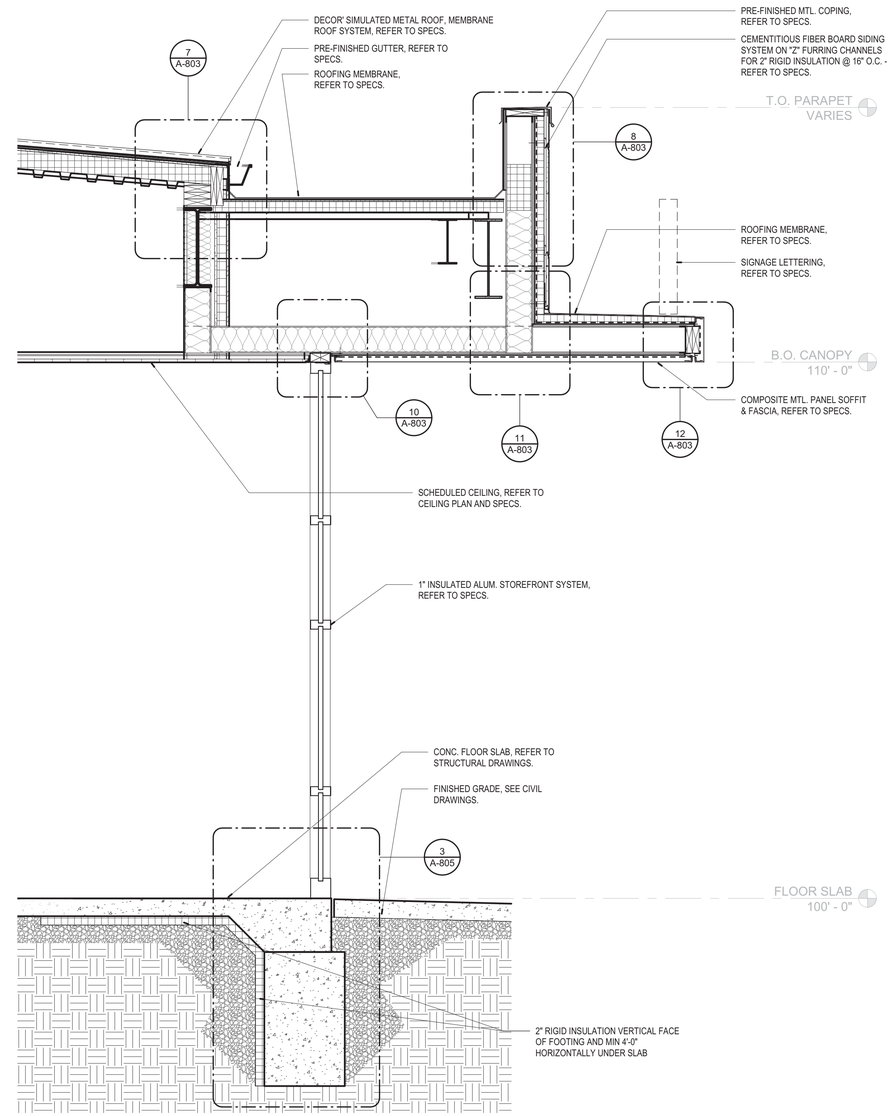

3 A-702 WALL SECTION - NORTH
3/4" = 1'-0"

Scenic Regional Library
read, explore, grow

SCENIC REGIONAL LIBRARY
WRIGHT CITY BRANCH
60 WILDCAT DRIVE
WRIGHT CITY, MO 63390

JEMA
SDA ARCHITECTS

ARCHITECT-OF-RECORD
JEMA
3005 LOCUST ST.
ST. LOUIS, MO 63103
T (314) 531-7400
CONTACT: SCOTT CLARK
E-MAIL: SCLARK@JEMASTL.COM

DESIGN ARCHITECT
SAPP DESIGN ASSOCIATES ARCHITECTS
3750 SOUTH FREMONT
SPRINGFIELD, MO 65804
T (417) 877-9600
F (417) 877-9696
CONTACT: JAMES STUFFLEBEAM
E: STUFFLEBEAM@SDAARCHITECTS.COM

CIVIL
COCHRAN
530A E. INDEPENDENCE DRIVE
UNION, MO 63084
CONTACT: DAVE VAN LEER
T (636) 584-0540
F (636) 584-0512
E-MAIL: DVANLEER@COCHRAN.COM

STRUCTURAL
ALPER AUDI, INC.
1804 BORMAN CIRCLE DRIVE
ST. LOUIS, MO 63146
T (314) 432-8600
F (314) 807-2774
CONTACT: STEVE EHRETT
E-MAIL: STEVE.EHRETT@ALPERAUDI.COM

MECHANICAL, ELECTRICAL, PLUMBING
BRIC PARTNERSHIP, LLC
343 S. KIRKWOOD ROAD, SUITE 204
KIRKWOOD, MO 63122
T (314) 725-5889
CONTACT: BRUCE COLEMAN
E: BCOLEMAN@BRICPARTNERSHIP.COM

ARCHITECT OF RECORD:

JOHN EDWARD MUELLER
MO ARCHITECTURAL LICENSE A2010039554
MO CERTIFICATE OF AUTHORITY A2014008380

No.	Date	Description
	06/13/17	ISSUED FOR RE-BID

DRAWN BY: **SC/SH**

PROJECT NUMBER: **16-1161.03**

SHEET TITLE:
WALL SECTIONS

A-702

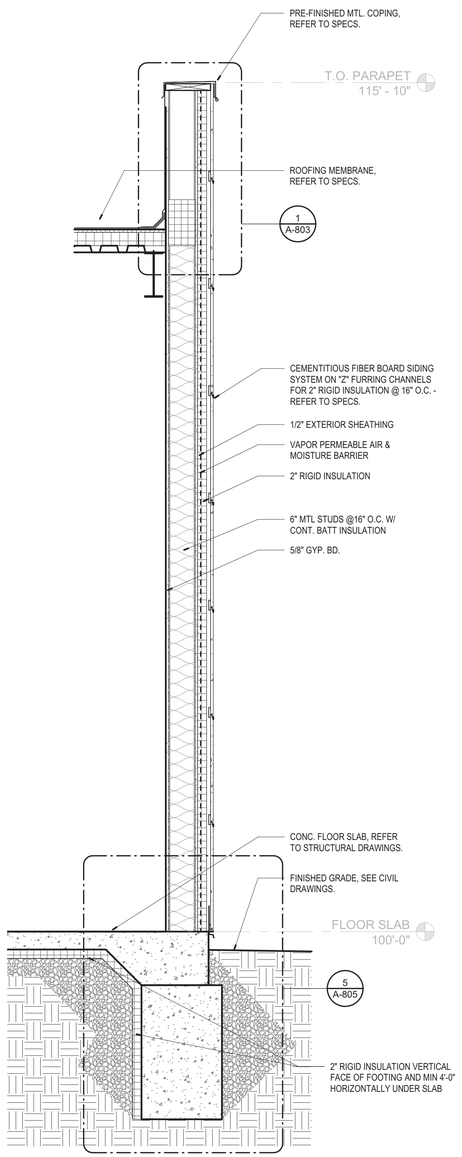

1 A-703 WALL SECTION - NORTH
3/4" = 1'-0"

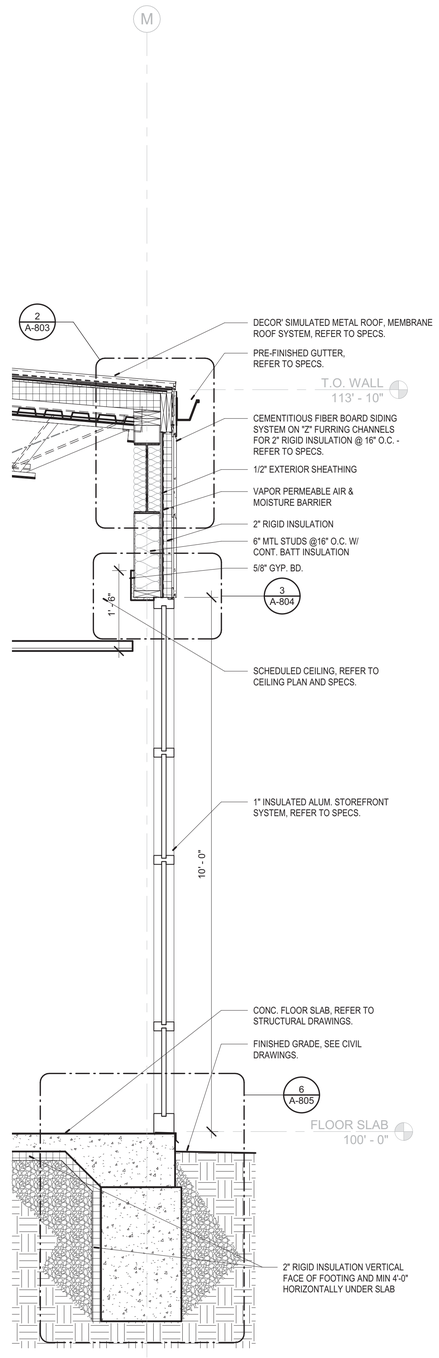

2 A-703 WALL SECTION - NORTH
3/4" = 1'-0"

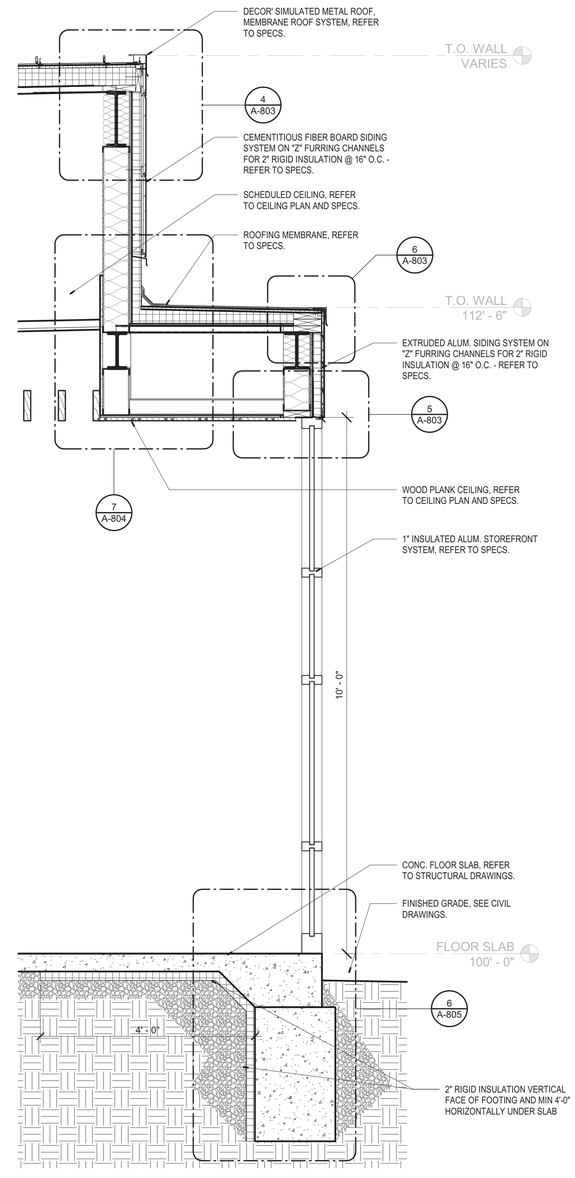

3 A-703 WALL SECTION - WEST
3/4" = 1'-0"

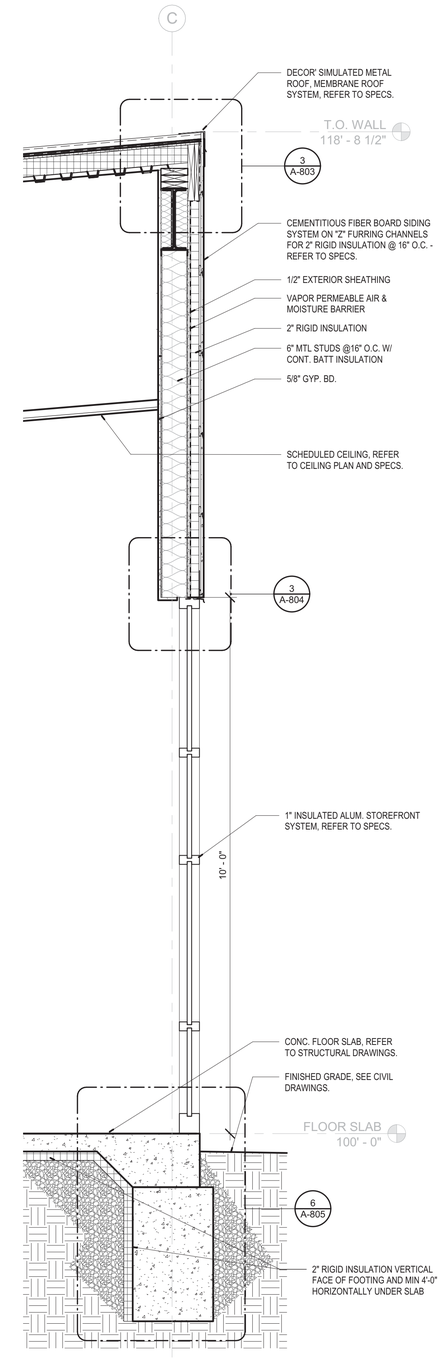

4 A-703 WALL SECTION - SOUTH
3/4" = 1'-0"

Scenic Regional Library
read, explore, grow

SCENIC REGIONAL LIBRARY
WRIGHT CITY BRANCH
60 WILDCAT DRIVE
WRIGHT CITY, MO 63390

JEMA
SDA ARCHITECTS

ARCHITECT-OF-RECORD
JEMA
3005 LOCUST ST.
ST. LOUIS, MO 63103
T (314) 531-7400
CONTACT: SCOTT CLARK
E-MAIL: SCLARK@JEMASTL.COM

DESIGN ARCHITECT
SAPP DESIGN ASSOCIATES ARCHITECTS
3750 SOUTH FREMONT
SPRINGFIELD, MO 65804
T (417) 877-9600
F (417) 877-9696
CONTACT: JAMES STUFFLEBEAM
E: STUFFLEBEAM@SDAARCHITECTS.COM

CIVIL
COCHRAN
530A E. INDEPENDENCE DRIVE
UNION, MO 63084
CONTACT: DAVE VAN LEER
T (636) 584-0540
F (636) 584-0512
E-MAIL: DVANLEER@COCHRAN.COM

STRUCTURAL
ALPER AUDI, INC.
1804 BORMAN CIRCLE DRIVE
ST. LOUIS, MO 63146
T (314) 432-8600
F (314) 807-2774
CONTACT: STEVE EHRETT
E-MAIL: STEVE.EHRETT@ALPERAUDI.COM

MECHANICAL, ELECTRICAL, PLUMBING
BRIC PARTNERSHIP, LLC
343 S. KIRKWOOD ROAD, SUITE 204
KIRKWOOD, MO 63122
T (314) 725-5889
CONTACT: BRUCE COLEMAN
E: BCOLEMAN@BRICPARTNERSHIP.COM

ARCHITECT OF RECORD:

JOHN EDWARD MUELLER
MO ARCHITECTURAL LICENSE A2010039554
MO CERTIFICATE OF AUTHORITY A2014008380

No.	Date	Description
	06/13/17	ISSUED FOR RE-BID

DRAWN BY: **SC/SH**

PROJECT NUMBER: **16-1161.03**

SHEET TITLE:
WALL SECTIONS

A-703

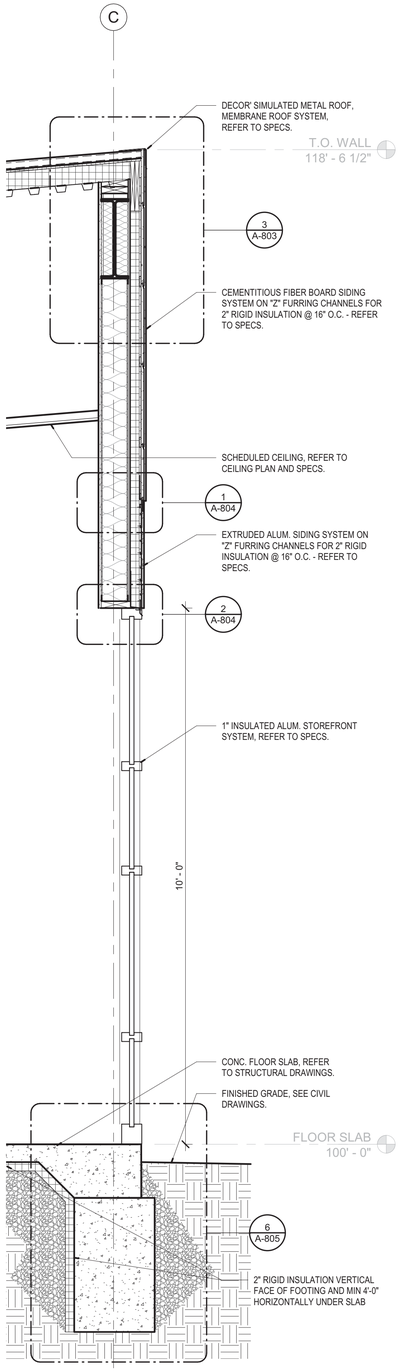

1 A-704 WALL SECTION - SOUTH
3/4" = 1'-0"

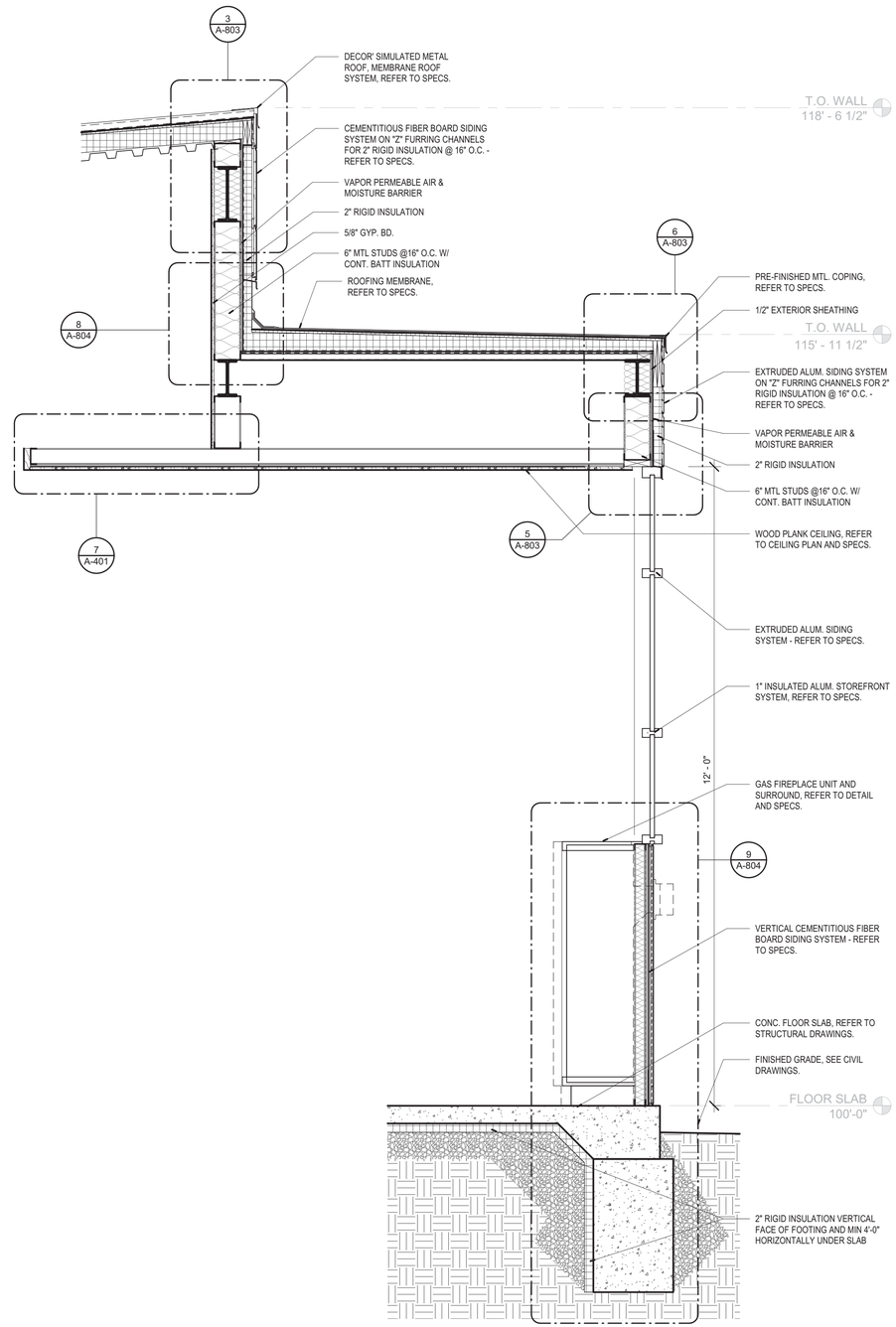

2 A-704 WALL SECTION - SOUTH
3/4" = 1'-0"

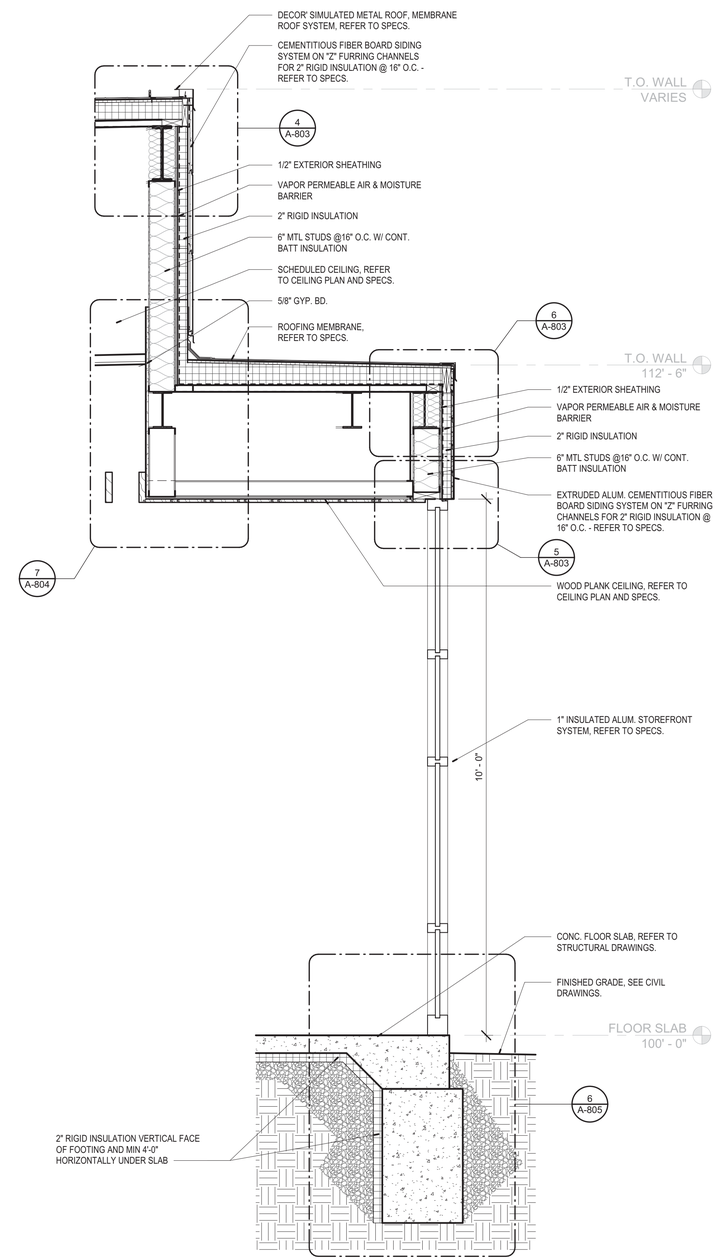

3 A-704 WALL SECTION - EAST
3/4" = 1'-0"

Scenic Regional Library
read, explore, grow

SCENIC REGIONAL LIBRARY
WRIGHT CITY BRANCH
60 WILDCAT DRIVE
WRIGHT CITY, MO 63390

JEMA
SDA ARCHITECTS

ARCHITECT-OF-RECORD
JEMA
3005 LOCUST ST.
ST. LOUIS, MO 63103
T (314) 531-7400
CONTACT: SCOTT CLARK
E-MAIL: SCLARK@JEMASTL.COM

DESIGN ARCHITECT
SAPP DESIGN ASSOCIATES ARCHITECTS
3750 SOUTH FREMONT
SPRINGFIELD, MO 65804
T (417) 877-9600
F (417) 877-9696
CONTACT: JAMES STUFFLEBEAM
E: STUFFLEBEAM@SDAARCHITECTS.COM

CIVIL
COCHRAN
530A E. INDEPENDENCE DRIVE
UNION, MO 63084
CONTACT: DAVE VAN LEER
T (636) 584-0540
F (636) 584-0512
E-MAIL: DVANLEER@COCHRAN.COM

STRUCTURAL
ALPER AUDI, INC.
1804 BORMAN CIRCLE DRIVE
ST. LOUIS, MO 63146
T (314) 432-8600
F (314) 807-2774
CONTACT: STEVE EHRETT
E-MAIL: STEVE.EHRETT@ALPERAUDI.COM

MECHANICAL, ELECTRICAL, PLUMBING
BRIC PARTNERSHIP, LLC
343 S. KIRKWOOD ROAD, SUITE 204
KIRKWOOD, MO 63122
T (314) 725-5889
CONTACT: BRUCE COLEMAN
E: BCOLEMAN@BRICPARTNERSHIP.COM

ARCHITECT OF RECORD:

JOHN EDWARD MUELLER
MO ARCHITECTURAL LICENSE A2010039554
MO CERTIFICATE OF AUTHORITY A2014008380

No.	Date	Description
	06/13/17	ISSUED FOR RE-BID

DRAWN BY: **SC/SH**

PROJECT NUMBER: **16-1161.03**

SHEET TITLE:
WALL SECTIONS

A-704

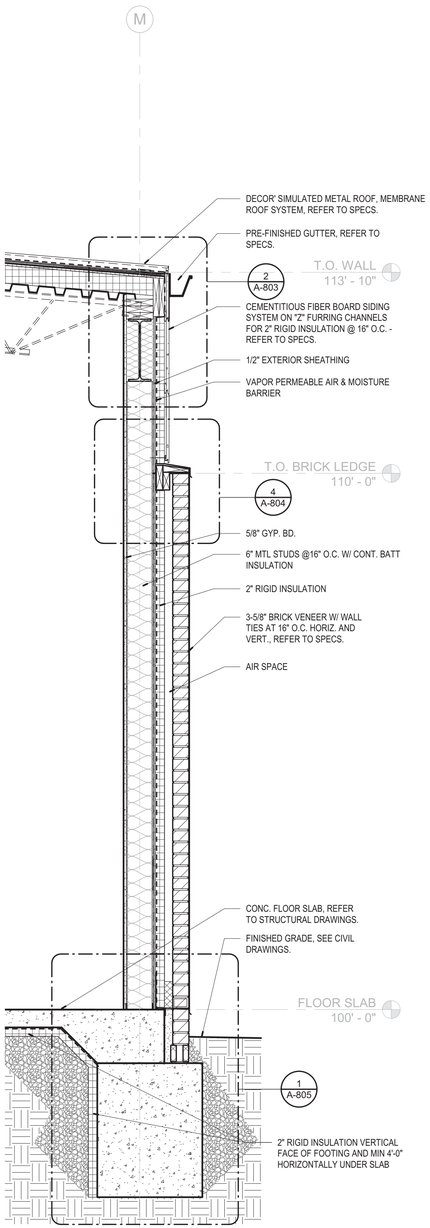

1 / A-705 WALL SECTION - NORTH
3/4" = 1'-0"

Scenic Regional Library
read, explore, grow

SCENIC REGIONAL LIBRARY
WRIGHT CITY BRANCH
60 WILDCAT DRIVE
WRIGHT CITY, MO 63390

JEMA
SDA ARCHITECTS

ARCHITECT-OF-RECORD
JEMA
3005 LOCUST ST.
ST. LOUIS, MO 63103
T (314) 531-7400
CONTACT: SCOTT CLARK
E-MAIL: SCLARK@JEMASTL.COM

DESIGN ARCHITECT
SAPP DESIGN ASSOCIATES ARCHITECTS
3750 SOUTH FREMONT
SPRINGFIELD, MO 65804
T (417) 877-9600
F (417) 877-9696
CONTACT: JAMES STUFFLEBEAM
E: STUFFLEBEAM@SDAARCHITECTS.COM

CIVIL
COCHRAN
530A E. INDEPENDENCE DRIVE
UNION, MO 63084
CONTACT: DAVE VAN LEER
T (636) 584-0540
F (636) 584-0512
E-MAIL: DVANLEER@COCHRAN.COM

STRUCTURAL
ALPER AUDI, INC.
1804 BORMAN CIRCLE DRIVE
ST. LOUIS, MO 63146
T (314) 432-8600
F (314) 807-2774
CONTACT: STEVE EHRETT
E-MAIL: STEVE.EHRETT@ALPERAUDI.COM

MECHANICAL, ELECTRICAL, PLUMBING
BRIC PARTNERSHIP, LLC
343 S. KIRKWOOD ROAD, SUITE 204
KIRKWOOD, MO 63122
T (314) 725-5889
CONTACT: BRUCE COLEMAN
E: BCOLEMAN@BRICPARTNERSHIP.COM

ARCHITECT OF RECORD:

JOHN EDWARD MUELLER
MO ARCHITECTURAL LICENSE A2010039554
MO CERTIFICATE OF AUTHORITY A2014008380

No.	Date	Description
	06/13/17	ISSUED FOR RE-BID

DRAWN BY: **SC/SH**

PROJECT NUMBER: **16-1161.03**

SHEET TITLE:
WALL SECTIONS

A-705

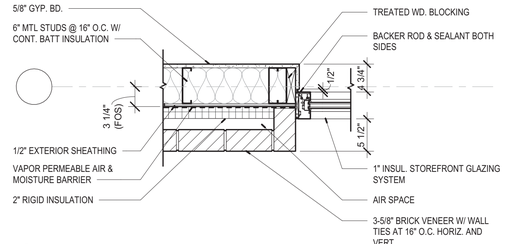

1 A-801 PLAN DETAIL @ BRICK - STOREFRONT
1" = 1'-0" REFERENCE 1 /A-201

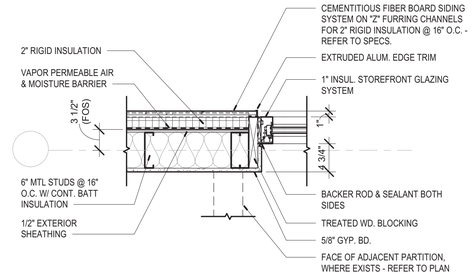

2 A-801 PLAN DETAIL @ FIBER CEMENT - STOREFRONT
1" = 1'-0" REFERENCE 1 /A-201

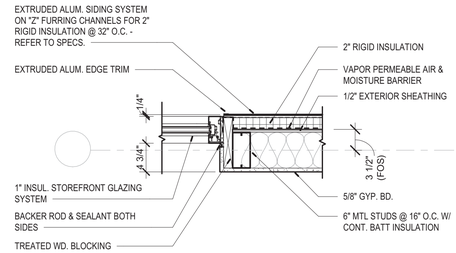

3 A-801 PLAN DETAIL @ EXTRUDED ALUM. - STOREFONT
1" = 1'-0" REFERENCE 1 /A-201

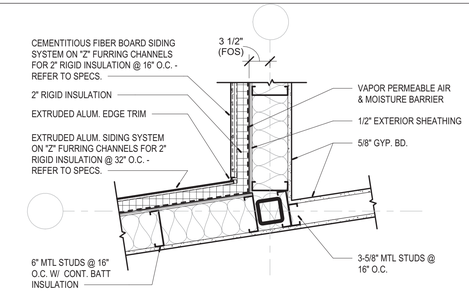

4 A-801 PLAN DETAIL @ FIBER CEMENT - LONGBOARD
1" = 1'-0" REFERENCE 2 /A-302

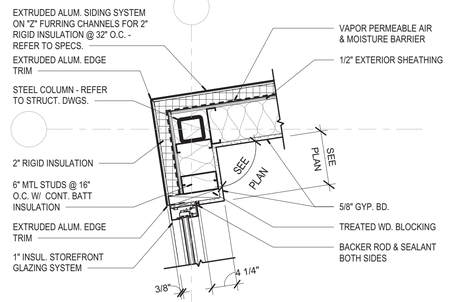

5 A-801 PLAN DETAIL @ EXTRUDED ALUM. - STOREFONT
1" = 1'-0" REFERENCE 2 /A-302

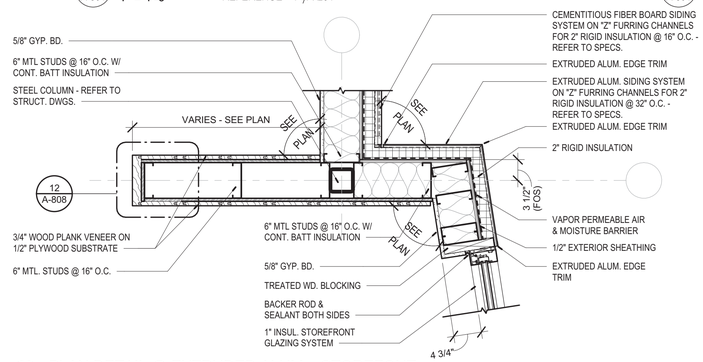

6 A-801 PLAN DETAIL @ EXTRUDED ALUM. - STOREFONT
1" = 1'-0" REFERENCE 2 /A-302

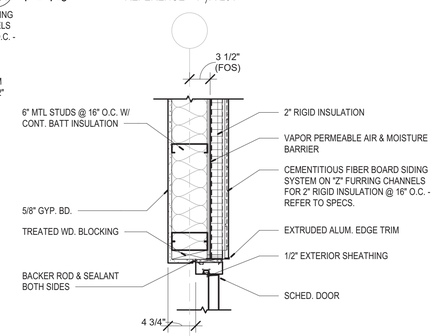

7 A-801 PLAN DETAIL @ FIBER CEMENT - DOOR
1" = 1'-0" REFERENCE 6 /A-302

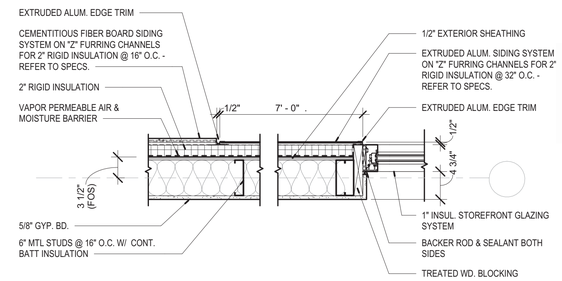

8 A-801 PLAN DETAIL @ EXTRUDED ALUM. - STOREFONT
1" = 1'-0" REFERENCE 1 /A-201

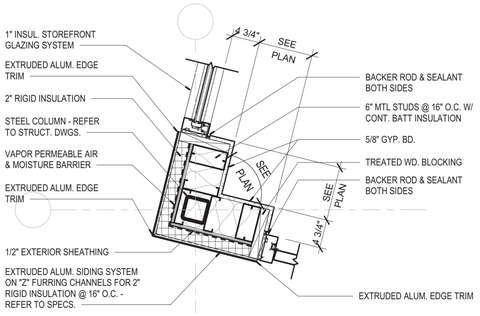

9 A-801 PLAN DETAIL @ EXTRUDED ALUM. - STOREFONT
1" = 1'-0" REFERENCE 3 /A-302

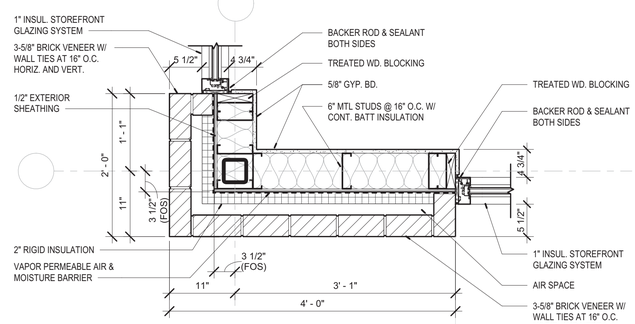

10 A-801 PLAN DETAIL @ BRICK - STOREFRONT
1" = 1'-0"

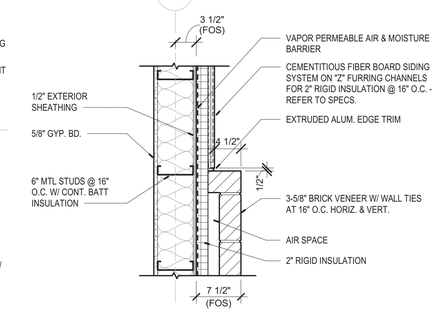

11 A-801 PLAN DETAIL @ FIBER CEMENT - BRICK
1" = 1'-0" REFERENCE 1 /A-201

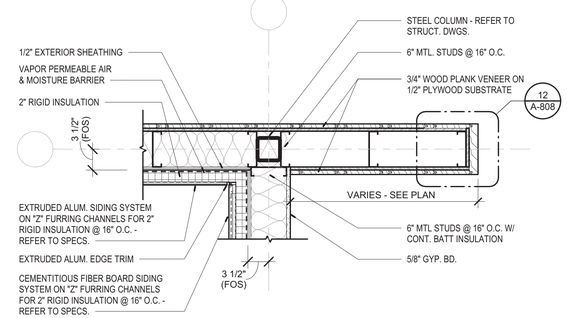

12 A-801 PLAN DETAIL @ LONGBOARD - CORNER / STOREFONT
1" = 1'-0" REFERENCE 5 /A-302

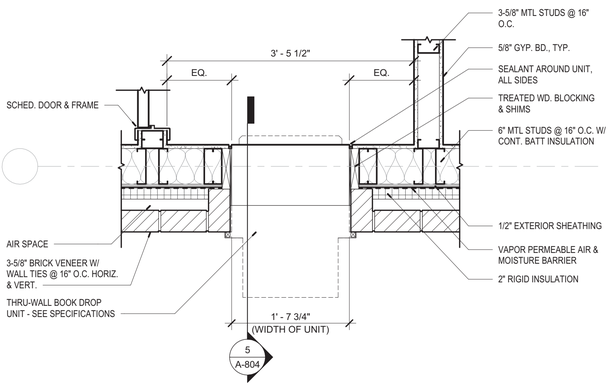

13 A-801 PLAN DETAIL @ BOOK DROP
1" = 1'-0" REFERENCE 1 /A-201

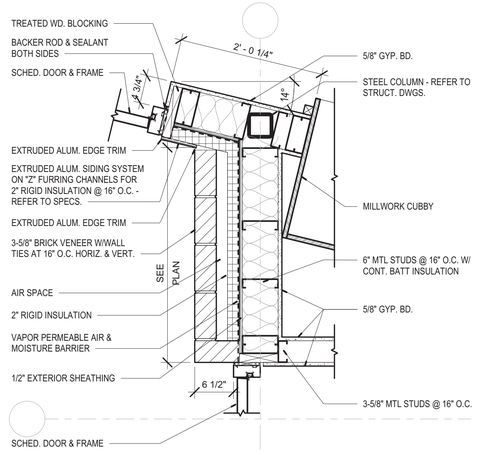

14 A-801 PLAN DETAIL @ EXTRUDED ALUM. - STOREFONT
1" = 1'-0" REFERENCE 3 /A-302

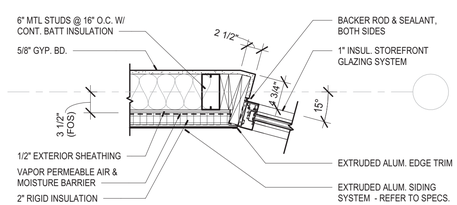

15 A-801 PLAN DETAIL @ EXTRUDED ALUM. - STOREFONT
1" = 1'-0" REFERENCE 1 /A-201

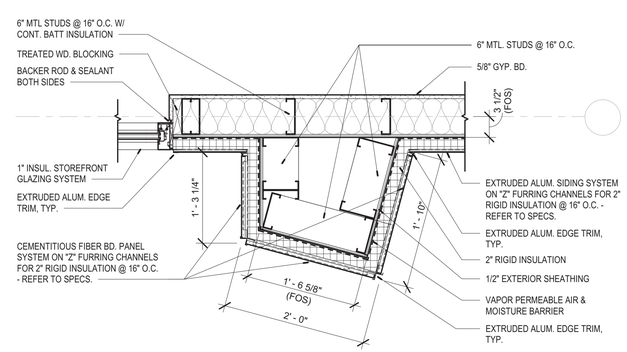

16 A-801 PLAN DETAIL @ BRICK - FIBER CEMENT - STOREFRONT
1" = 1'-0" REFERENCE 1 /A-201

Scenic Regional Library
read, explore, grow

SCENIC REGIONAL LIBRARY
WRIGHT CITY BRANCH
60 WILDCAT DRIVE
WRIGHT CITY, MO 63390

JEMA
SDA ARCHITECTS

ARCHITECT-OF-RECORD
JEMA
3005 LOCUST ST.
ST. LOUIS, MO 63103
T (314) 531-7400
CONTACT: SCOTT CLARK
E-MAIL: SCLARK@JEMASTL.COM

DESIGN ARCHITECT
SAPP DESIGN ASSOCIATES ARCHITECTS
3750 SOUTH FREMONT
SPRINGFIELD, MO 65804
T (417) 877-9600
F (417) 877-9696
CONTACT: JAMES STUFFLEBEAM
E: STUFFLEBEAM@SDAARCHITECTS.COM

CIVIL
COCHRAN
530A E. INDEPENDENCE DRIVE
UNION, MO 63084
CONTACT: DAVE VAN LEER
T (636) 584-0540
F (636) 584-0512
E-MAIL: DVANLEER@COCHRAN.COM

STRUCTURAL
ALPER AUDI, INC.
1804 BORMAN CIRCLE DRIVE
ST. LOUIS, MO 63146
T (314) 432-8600
F (314) 807-2774
CONTACT: STEVE EHRETT
E-MAIL: STEVE.EHRETT@ALPERAUDI.COM

MECHANICAL, ELECTRICAL, PLUMBING
BRIC PARTNERSHIP, LLC
343 S. KIRKWOOD ROAD, SUITE 204
KIRKWOOD, MO 63122
T (314) 725-5889
CONTACT: BRUCE COLEMAN
E: BCOLEMAN@BRICPARTNERSHIP.COM

ARCHITECT OF RECORD:

JOHN EDWARD MUELLER
MO ARCHITECTURAL LICENSE A2010039554
MO CERTIFICATE OF AUTHORITY A2014008380

No.	Date	Description
	06/13/17	ISSUED FOR RE-BID

DRAWN BY: **SC/SH**

PROJECT NUMBER: **16-1161.03**

SHEET TITLE:
DETAILS - PLAN

A-801

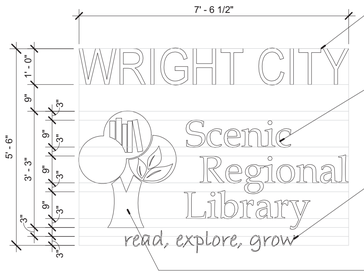

12"H x 2"D INDIVIDUAL STAINLESS STEEL LETTERS, ARIAL NARROW FONT, PIN MOUNTED TO FACE OF WALL - REFER TO SPECS. FOR MORE INFORMATION

9"H x 1"D INDIVIDUAL STAINLESS STEEL LETTERS, BOOK ANTIQUA FONT, PIN MOUNTED TO FACE OF WALL - REFER TO SPECS. FOR MORE INFORMATION

4"H x 1"D INDIVIDUAL STAINLESS STEEL LETTERS, BRADLEY ITC FONT, PIN MOUNTED TO FACE OF WALL - REFER TO SPECS. FOR MORE INFORMATION

SCENIC REGIONAL LIBRARY LOGO, PIN MOUNTED TO FACE OF WALL - REFER TO SPECS. FOR MORE INFORMATION

1 A-802 SIGNAGE - LONGBOARD
1/2" = 1'-0"

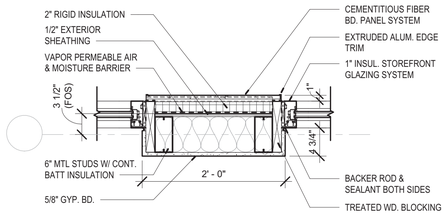

3 A-802 PLAN DETAIL @ FIBER CEMENT - STOREFRONT
1" = 1'-0" REFERENCE 1 /A-201

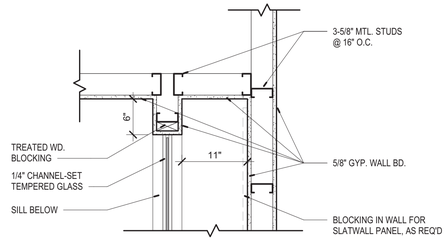

4 A-802 PLAN DETAIL
1" = 1'-0" REFERENCE 1 /A-302

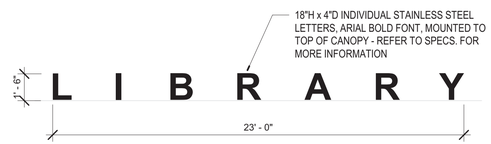

5 A-802 BUILDING SIGNAGE - CANOPY ROOF
1/4" = 1'-0"

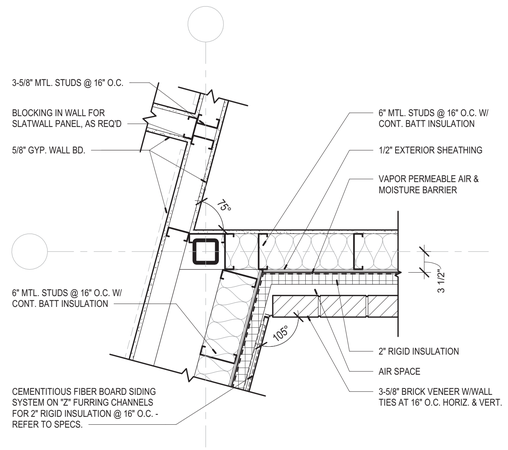

7 A-802 PLAN DETAIL
1" = 1'-0" REFERENCE 1 /A-302

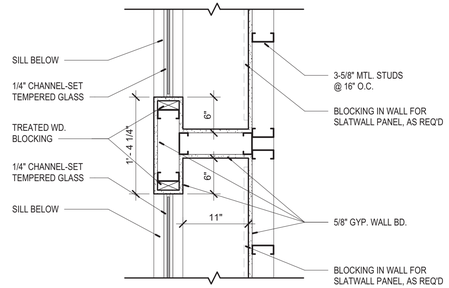

8 A-802 PLAN DETAIL
1" = 1'-0" REFERENCE 1 /A-302

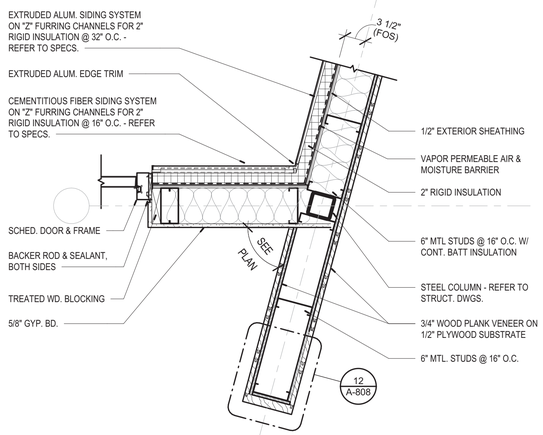

11 A-802 PLAN DETAIL @ EXTRUDED ALUM. - STOREFONT
1" = 1'-0" REFERENCE 5 /A-302

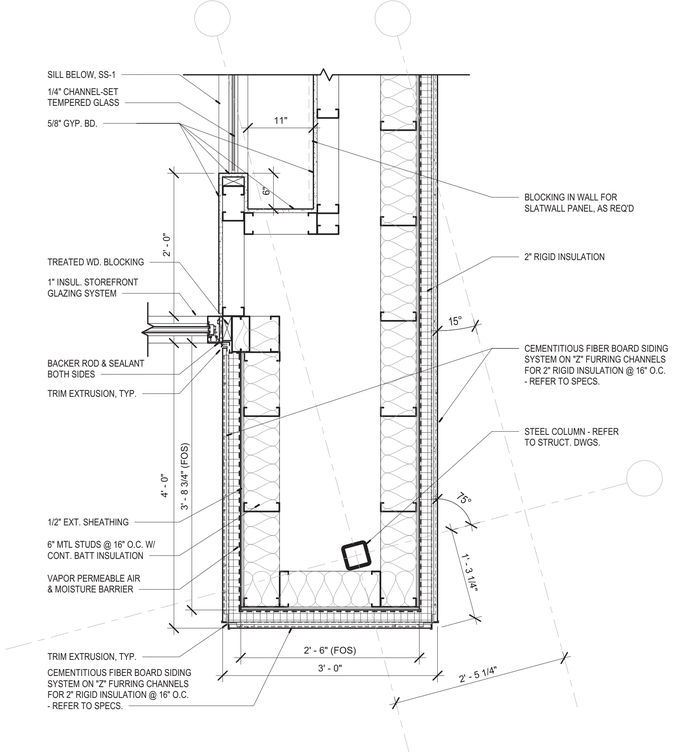

12 A-802 PLAN DETAIL @ ENTRY
1" = 1'-0" REFERENCE 1 /A-201

Scenic Regional Library
read, explore, grow

SCENIC REGIONAL LIBRARY
WRIGHT CITY BRANCH
60 WILDCAT DRIVE
WRIGHT CITY, MO 63390

JEMA
SDA ARCHITECTS

ARCHITECT-OF-RECORD
JEMA
3005 LOCUST ST.
ST. LOUIS, MO 63103
T (314) 531-7400
CONTACT: SCOTT CLARK
E-MAIL: SCLARK@JEMASTL.COM

DESIGN ARCHITECT
SAPP DESIGN ASSOCIATES ARCHITECTS
3750 SOUTH FREMONT
SPRINGFIELD, MO 65804
T (417) 877-9600
F (417) 877-9696
CONTACT: JAMES STUFFLEBEAM
E: STUFFLEBEAM@SDAARCHITECTS.COM

CIVIL
COCHRAN
530A E. INDEPENDENCE DRIVE
UNION, MO 63084
CONTACT: DAVE VAN LEER
T (636) 584-0540
F (636) 584-0512
E-MAIL: DVANLEER@COCHRAN.COM

STRUCTURAL
ALPER AUDI, INC.
1804 BORMAN CIRCLE DRIVE
ST. LOUIS, MO 63146
T (314) 432-8600
F (314) 807-2774
CONTACT: STEVE EHRETT
E-MAIL: STEVE.EHRETT@ALPERAUDI.COM

MECHANICAL, ELECTRICAL, PLUMBING
BRIC PARTNERSHIP, LLC
343 S. KIRKWOOD ROAD, SUITE 204
KIRKWOOD, MO 63122
T (314) 725-5889
CONTACT: BRUCE COLEMAN
E: BCOLEMAN@BRICPARTNERSHIP.COM

ARCHITECT OF RECORD:

JOHN EDWARD MUELLER
MO ARCHITECTURAL LICENSE A2010039554
MO CERTIFICATE OF AUTHORITY A2014008380

No.	Date	Description
	06/13/17	ISSUED FOR RE-BID

DRAWN BY: **SC/SH**

PROJECT NUMBER: **16-1161.03**

SHEET TITLE:
DETAILS - PLAN

A-802

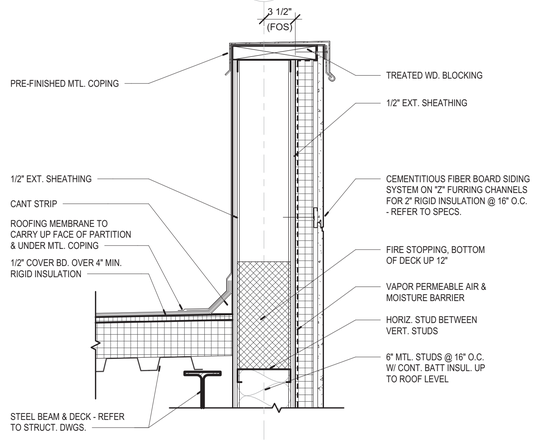

1 A-803 WALL DETAIL
1 1/2" = 1'-0" REFERENCE 1 /A-703

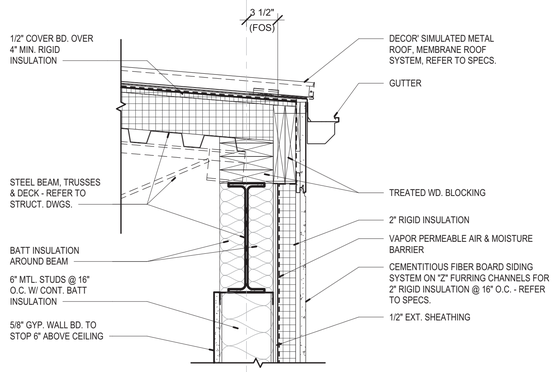

2 A-803 WALL DETAIL
1 1/2" = 1'-0" REFERENCE 1 /A-702

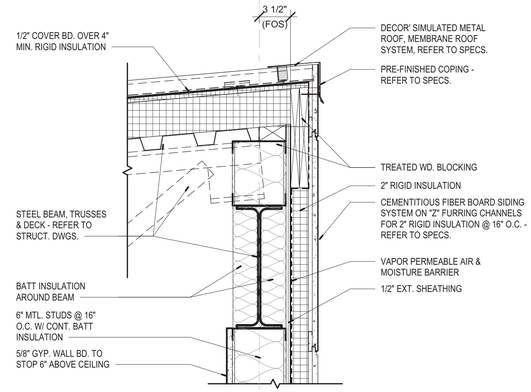

3 A-803 WALL DETAIL
1 1/2" = 1'-0" REFERENCE 4 /A-703

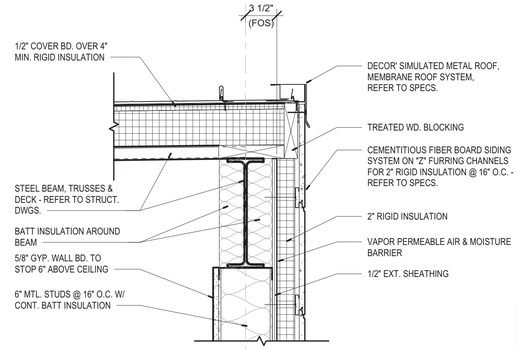

4 A-803 WALL DETAIL
1 1/2" = 1'-0" REFERENCE 3 /A-703

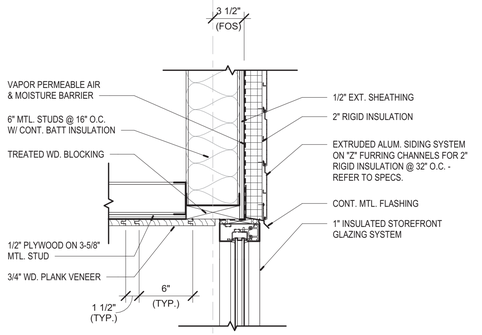

5 A-803 WALL DETAIL
1 1/2" = 1'-0" REFERENCE 2 /A-402

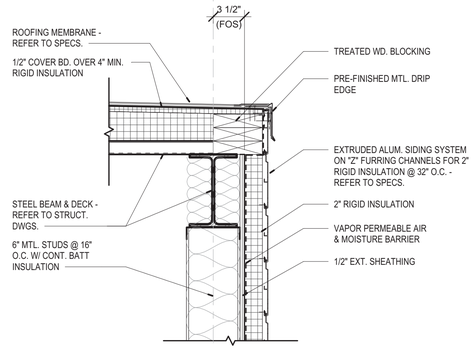

6 A-803 WALL DETAIL
1 1/2" = 1'-0" REFERENCE 3 /A-703

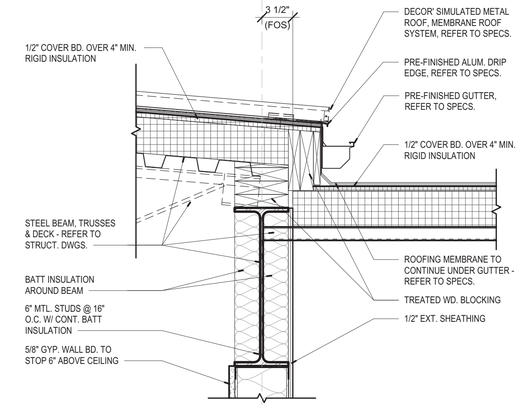

7 A-803 WALL DETAIL
1 1/2" = 1'-0" REFERENCE 2 /A-702

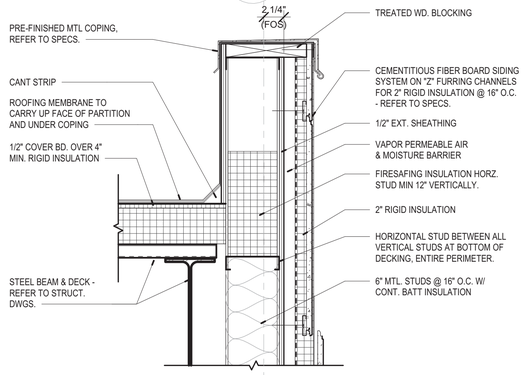

8 A-803 WALL DETAIL
1 1/2" = 1'-0" REFERENCE 2 /A-702

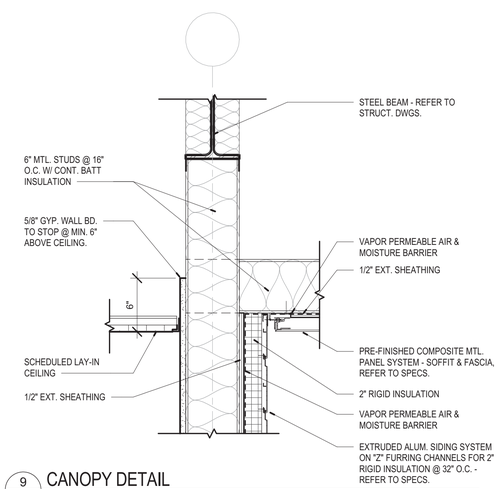

9 A-803 CANOPY DETAIL
1 1/2" = 1'-0" REFERENCE 2 /A-702

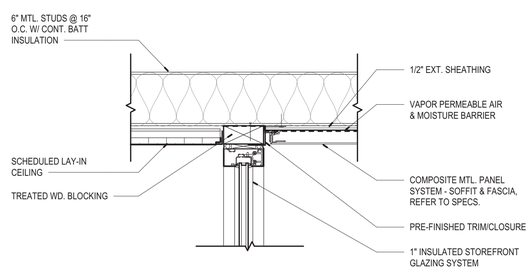

10 A-803 CANOPY DETAIL
1 1/2" = 1'-0" REFERENCE 3 /A-702

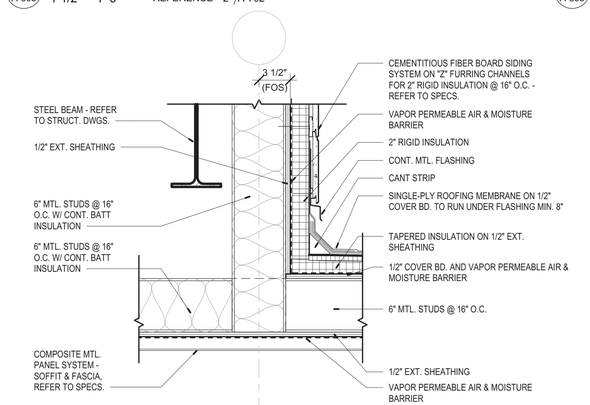

11 A-803 CANOPY DETAIL
1 1/2" = 1'-0" REFERENCE 2 /A-702

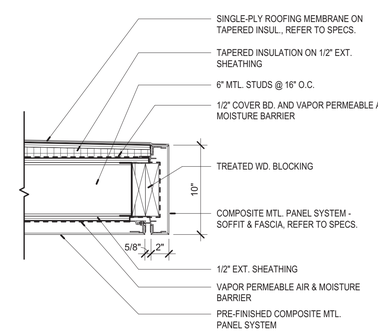

12 A-803 CANOPY DETAIL
1 1/2" = 1'-0" REFERENCE 2 /A-702

Scenic Regional Library
read, explore, grow

SCENIC REGIONAL LIBRARY
WRIGHT CITY BRANCH
60 WILDCAT DRIVE
WRIGHT CITY, MO 63390

JEMA
SDA ARCHITECTS

ARCHITECT-OF-RECORD
JEMA
3005 LOCUST ST.
ST. LOUIS, MO 63103
T (314) 531-7400
CONTACT: SCOTT CLARK
E-MAIL: SCLARK@JEMASTL.COM

DESIGN ARCHITECT
SAPP DESIGN ASSOCIATES ARCHITECTS
3750 SOUTH FREMONT
SPRINGFIELD, MO 65804
T (417) 877-9600
F (417) 877-9696
CONTACT: JAMES STUFFLEBEAM
E: STUFFLEBEAM@SDAARCHITECTS.COM

CIVIL
COCHRAN
530A E. INDEPENDENCE DRIVE
UNION, MO 63084
CONTACT: DAVE VAN LEER
T (636) 584-0540
F (636) 584-0512
E-MAIL: DVANLEER@COCHRAN.COM

STRUCTURAL
ALPER AUDI, INC.
1804 BORMAN CIRCLE DRIVE
ST. LOUIS, MO 63146
T (314) 432-8600
F (314) 807-2774
CONTACT: STEVE EHRETT
E-MAIL: STEVE.EHRETT@ALPERAUDI.COM

MECHANICAL, ELECTRICAL, PLUMBING
BRIC PARTNERSHIP, LLC
343 S. KIRKWOOD ROAD, SUITE 204
KIRKWOOD, MO 63122
T (314) 725-5889
CONTACT: BRUCE COLEMAN
E: BCOLEMAN@BRICPARTNERSHIP.COM

ARCHITECT OF RECORD:

JOHN EDWARD MUELLER
MO ARCHITECTURAL LICENSE A2010039554
MO CERTIFICATE OF AUTHORITY A2014008380

No.	Date	Description
	06/13/17	ISSUED FOR RE-BID

DRAWN BY: **SC/SH**

PROJECT NUMBER: **16-1161.03**

SHEET TITLE:
DETAILS - BUILDING

A-803

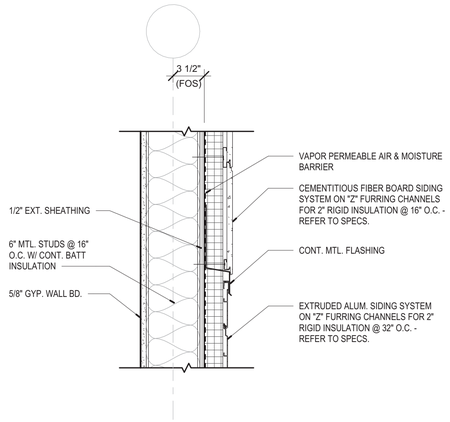

1 A-804 WALL BASE DETAIL
1 1/2" = 1'-0" REFERENCE 1 /A-702

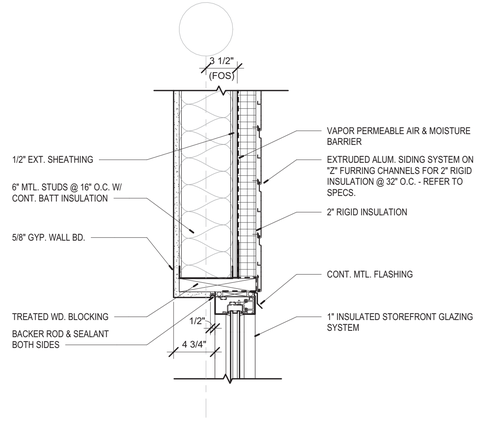

2 A-804 WALL TRANSITION DETAIL
1 1/2" = 1'-0" REFERENCE 1 /A-704

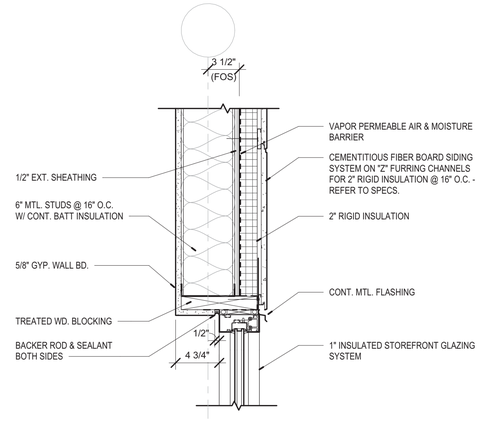

3 A-804 WALL TRANSITION DETAIL
1 1/2" = 1'-0" REFERENCE 2 /A-703

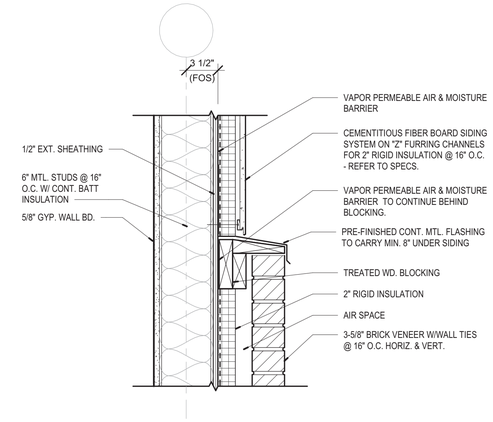

4 A-804 WALL TRANSITION DETAIL
1 1/2" = 1'-0" REFERENCE 1 /A-705

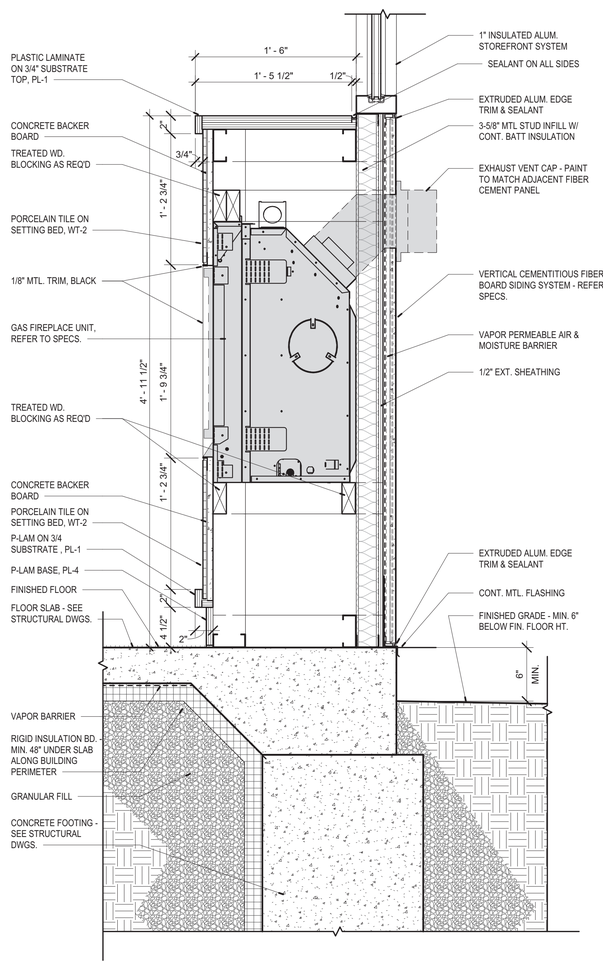

9 A-804 WALL BASE & FIREPLACE DETAIL
1 1/2" = 1'-0" REFERENCE 5 /A-605

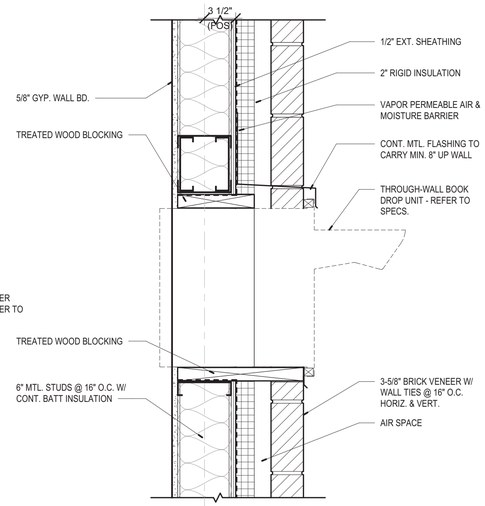

5 A-804 WALL DETAIL - BOOK DROP
1 1/2" = 1'-0" REFERENCE 13/A-801

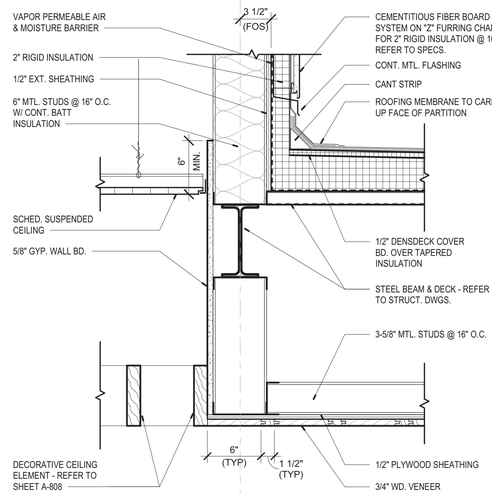

7 A-804 WALL TRANSITION DETAIL
1 1/2" = 1'-0" REFERENCE 3 /A-703

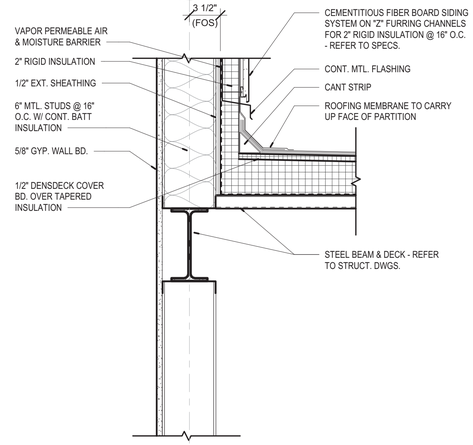

8 A-804 WALL TRANSITION DETAIL
1 1/2" = 1'-0" REFERENCE 2 /A-704

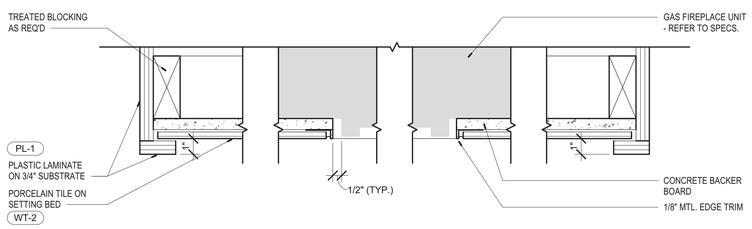

10 A-804 FIREPLACE PLAN DETAIL
3" = 1'-0" REFERENCE 5 /A-605

Scenic Regional Library
read, explore, grow

SCENIC REGIONAL LIBRARY
WRIGHT CITY BRANCH
60 WILDCAT DRIVE
WRIGHT CITY, MO 63390

JEMA
SDA ARCHITECTS

ARCHITECT-OF-RECORD
JEMA
3005 LOCUST ST.
ST. LOUIS, MO 63103
T (314) 531-7400
CONTACT: SCOTT CLARK
E-MAIL: SCLARK@JEMASTL.COM

DESIGN ARCHITECT
SAPP DESIGN ASSOCIATES ARCHITECTS
3750 SOUTH FREMONT
SPRINGFIELD, MO 65804
T (417) 877-9600
F (417) 877-9696
CONTACT: JAMES STUFFLEBEAM
E: STUFFLEBEAM@SDAARCHITECTS.COM

CIVIL
COCHRAN
530A E. INDEPENDENCE DRIVE
UNION, MO 63084
CONTACT: DAVE VAN LEER
T (636) 584-0540
F (636) 584-0512
E-MAIL: DVANLEER@COCHRAN.COM

STRUCTURAL
ALPER AUDI, INC.
1804 BORMAN CIRCLE DRIVE
ST. LOUIS, MO 63146
T (314) 432-9600
F (314) 807-2774
CONTACT: STEVE EHRETT
E-MAIL: STEVE.EHRETT@ALPERAUDI.COM

MECHANICAL, ELECTRICAL, PLUMBING
BRIC PARTNERSHIP, LLC
343 S. KIRKWOOD ROAD, SUITE 204
KIRKWOOD, MO 63122
T (314) 725-5889
CONTACT: BRUCE COLEMAN
E: BCOLEMAN@BRICPARTNERSHIP.COM

ARCHITECT OF RECORD:

JOHN EDWARD MUELLER
MO ARCHITECTURAL LICENSE A2010039554
MO CERTIFICATE OF AUTHORITY A2014008380

No.	Date	Description
	06/13/17	ISSUED FOR RE-BID

DRAWN BY: **SC/SH**

PROJECT NUMBER: **16-1161.03**

SHEET TITLE:
DETAILS - BUILDING

A-804

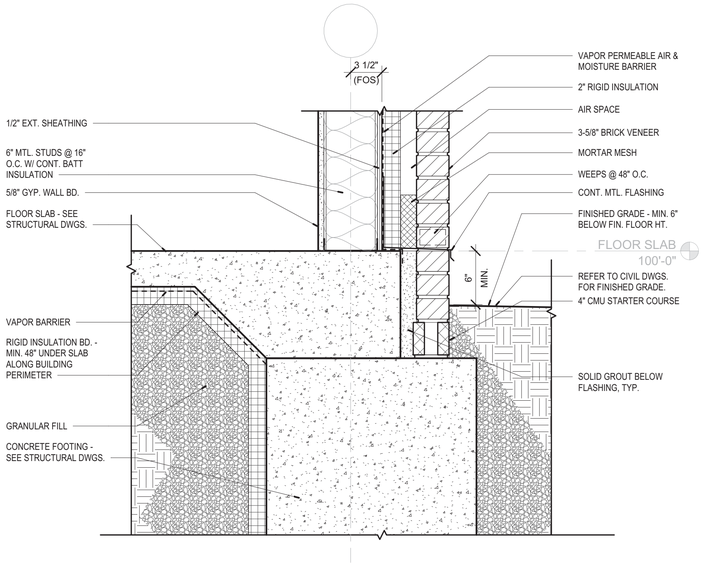

1 A-805 WALL BASE DETAIL
1 1/2" = 1'-0" REFERENCE 1 /A-705

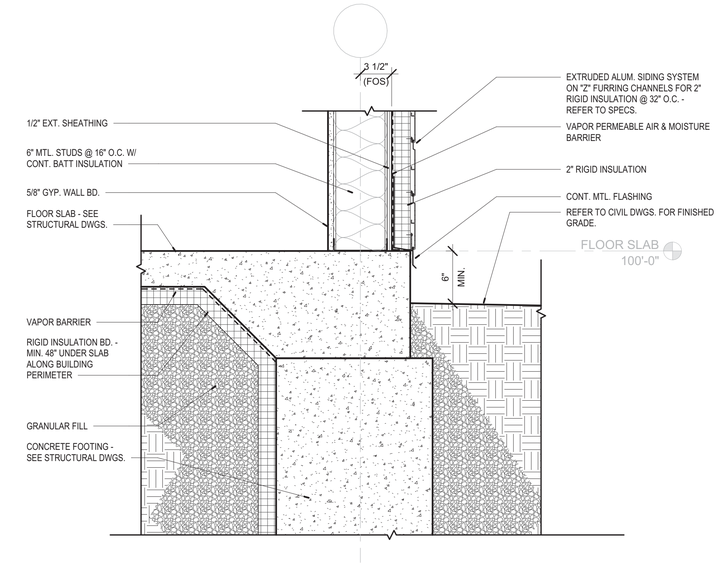

2 A-805 WALL BASE DETAIL
1 1/2" = 1'-0" REFERENCE 1 /A-702

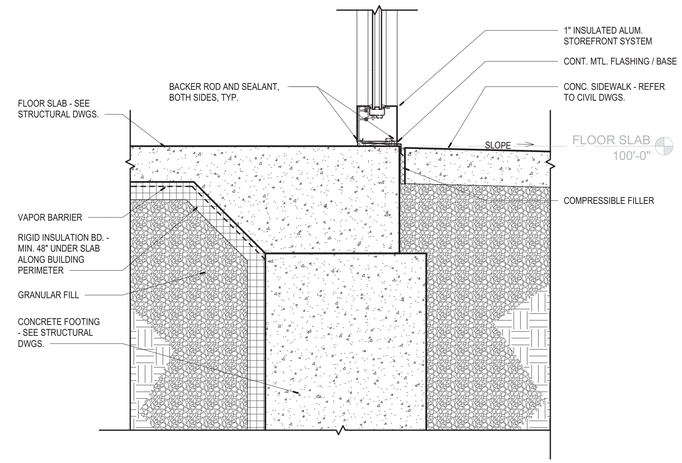

3 A-805 WALL BASE DETAIL
1 1/2" = 1'-0" REFERENCE 3 /A-702

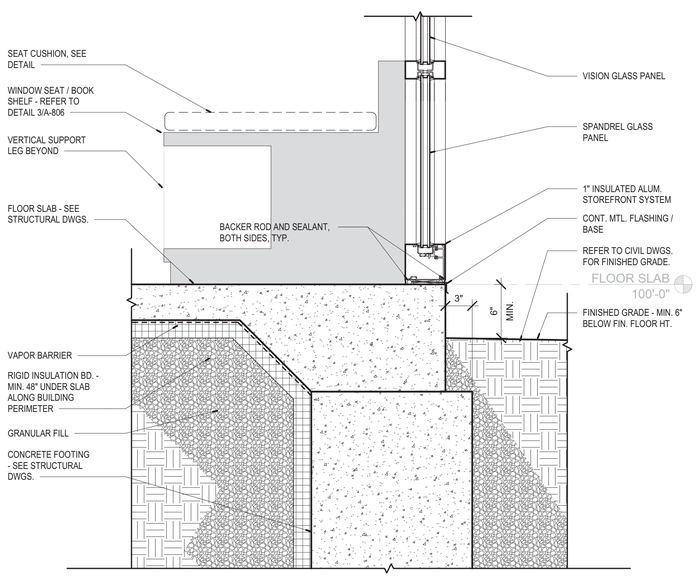

4 A-805 WALL BASE DETAIL
1 1/2" = 1'-0" REFERENCE /

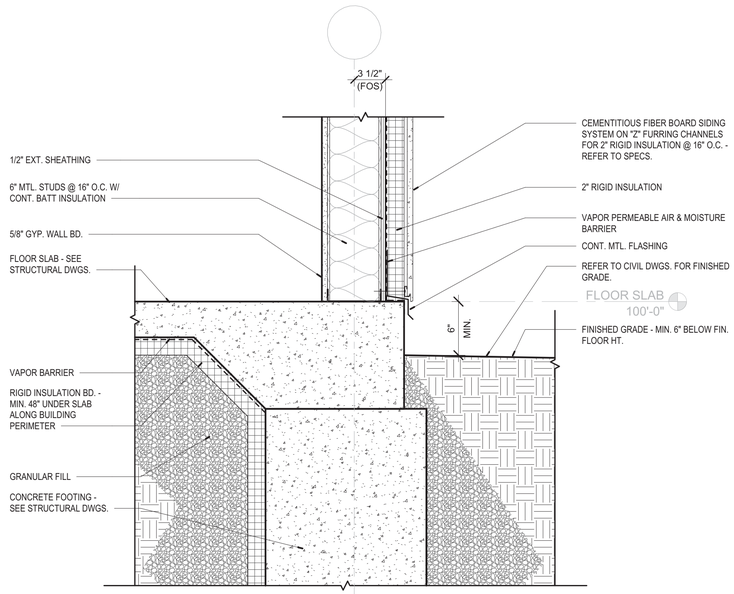

5 A-805 WALL BASE DETAIL
1 1/2" = 1'-0" REFERENCE 1 /A-703

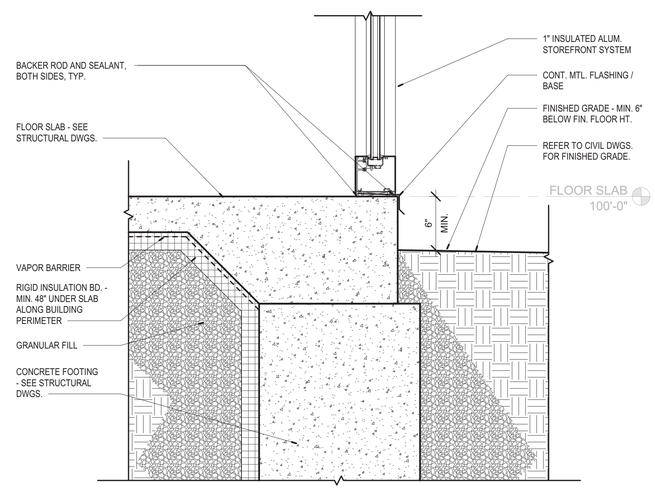

6 A-805 WALL BASE DETAIL
1 1/2" = 1'-0" REFERENCE 2 /A-703

Scenic Regional Library
read, explore, grow

SCENIC REGIONAL LIBRARY
WRIGHT CITY BRANCH
60 WILDCAT DRIVE
WRIGHT CITY, MO 63390

JEMA
SDA ARCHITECTS

ARCHITECT-OF-RECORD
JEMA
3005 LOCUST ST.
ST. LOUIS, MO 63103
T (314) 531-7400
CONTACT: SCOTT CLARK
E-MAIL: SCLARK@JEMASTL.COM

DESIGN ARCHITECT
SAPP DESIGN ASSOCIATES ARCHITECTS
3750 SOUTH FREMONT
SPRINGFIELD, MO 65804
T (417) 877-9600
F (417) 877-9696
CONTACT: JAMES STUFFLEBEAM
E: STUFFLEBEAM@SDAARCHITECTS.COM

CIVIL
COCHRAN
530A E. INDEPENDENCE DRIVE
UNION, MO 63084
CONTACT: DAVE VAN LEER
T (636) 584-0540
F (636) 584-0512
E-MAIL: DVANLEER@COCHRAN.COM

STRUCTURAL
ALPER AUDI, INC.
1804 BORMAN CIRCLE DRIVE
ST. LOUIS, MO 63146
T (314) 432-8600
F (314) 807-2774
CONTACT: STEVE EHRETT
E-MAIL: STEVE.EHRETT@ALPERAUDI.COM

MECHANICAL, ELECTRICAL, PLUMBING
BRIC PARTNERSHIP, LLC
343 S. KIRKWOOD ROAD, SUITE 204
KIRKWOOD, MO 63122
T (314) 725-5889
CONTACT: BRUCE COLEMAN
E: BCOLEMAN@BRICPARTNERSHIP.COM

ARCHITECT OF RECORD:

JOHN EDWARD MUELLER
MO ARCHITECTURAL LICENSE A2010039554
MO CERTIFICATE OF AUTHORITY A2014008380

No.	Date	Description
	06/13/17	ISSUED FOR RE-BID

DRAWN BY: **SC/SH**

PROJECT NUMBER: **16-1161.03**

SHEET TITLE:
DETAILS - BUILDING

A-805

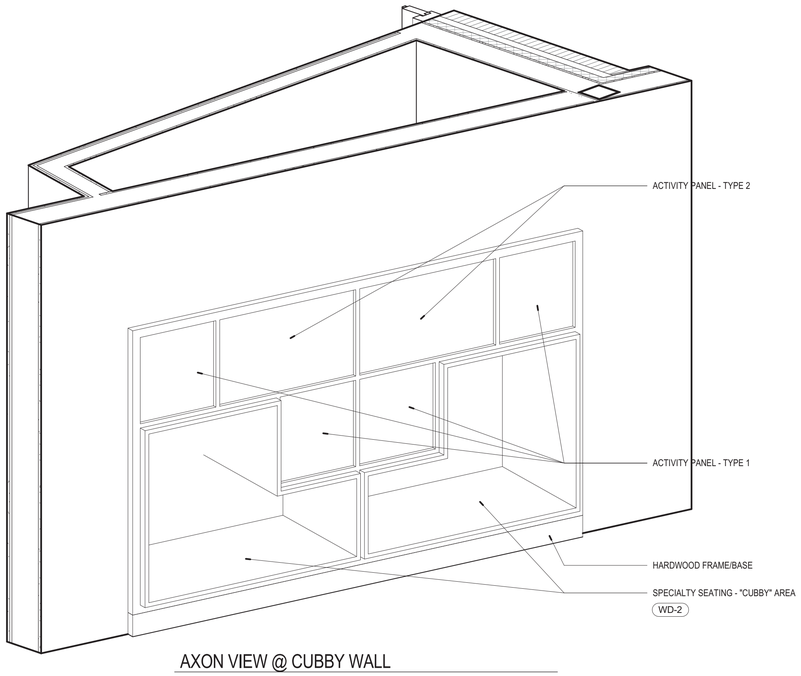

AXON VIEW @ CUBBY WALL

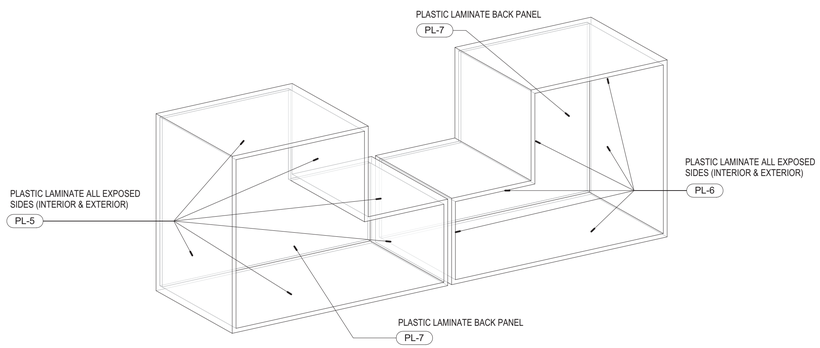

AXON VIEW @ CUBBY SEATING

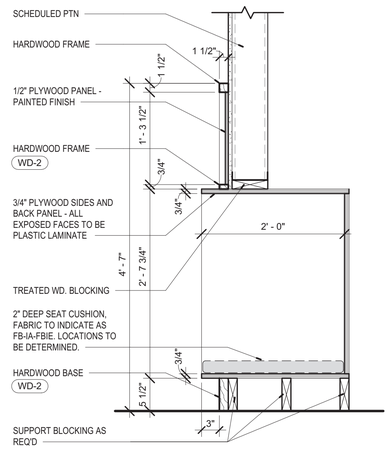

3 A-806 DETAIL @ CUBBY WALL
1" = 1'-0"

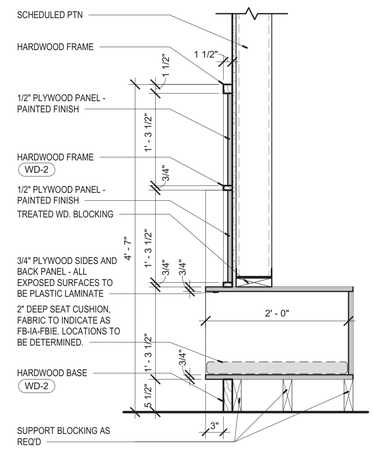

4 A-806 DETAIL @ CUBBY WALL
1" = 1'-0"

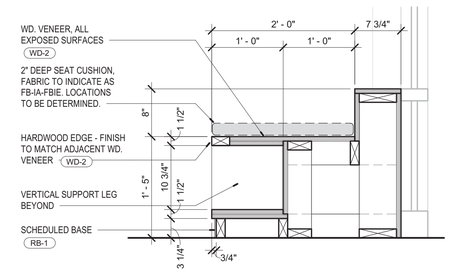

5 A-806 DETAIL @ WINDOW SEAT
1" = 1'-0"

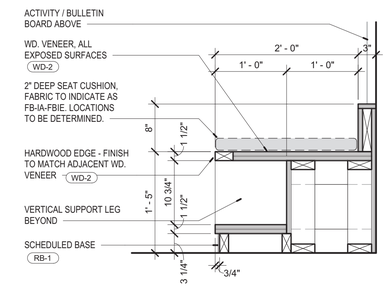

10 A-806 DETAIL @ WINDOW SEAT
1" = 1'-0"

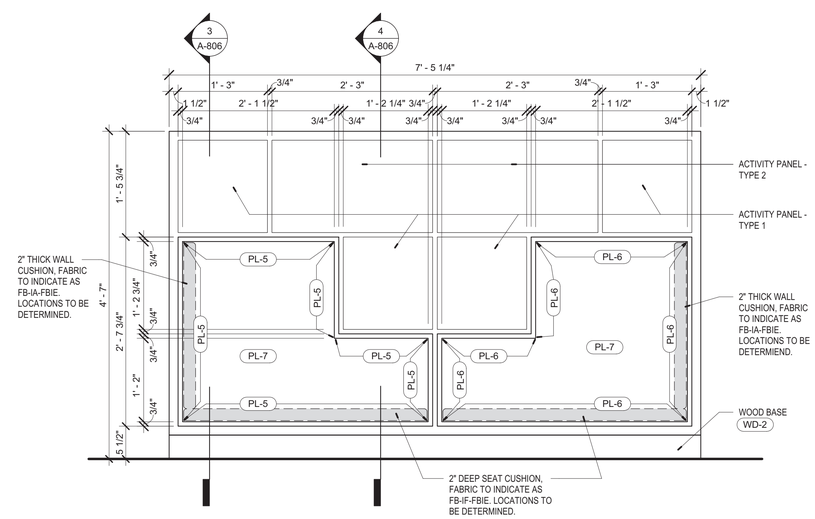

1 A-806 ELEVATION @ CUBBY WALL
1" = 1'-0"

Scenic Regional Library
read, explore, grow

SCENIC REGIONAL LIBRARY
WRIGHT CITY BRANCH
60 WILDCAT DRIVE
WRIGHT CITY, MO 63390

JEMA
SDA ARCHITECTS

ARCHITECT-OF-RECORD
JEMA
3005 LOCUST ST.
ST. LOUIS, MO 63103
T (314) 531-7400
CONTACT: SCOTT CLARK
E-MAIL: SCLARK@JEMASTL.COM

DESIGN ARCHITECT
SAPP DESIGN ASSOCIATES ARCHITECTS
3750 SOUTH FREMONT
SPRINGFIELD, MO 65804
T (417) 877-9600
F (417) 877-9696
CONTACT: JAMES STUFFLEBEAM
E: STUFFLEBEAM@SDAARCHITECTS.COM

CIVIL
COCHRAN
530A E. INDEPENDENCE DRIVE
UNION, MO 63084
CONTACT: DAVE VAN LEER
T (636) 584-0540
F (636) 584-0512
E-MAIL: DVANLEER@COCHRAN.COM

STRUCTURAL
ALPER AUDI, INC.
1804 BORMAN CIRCLE DRIVE
ST. LOUIS, MO 63146
T (314) 432-8600
F (314) 807-2774
CONTACT: STEVE EHRETT
E-MAIL: STEVE.EHRETT@ALPERAUDI.COM

MECHANICAL, ELECTRICAL, PLUMBING
BRIC PARTNERSHIP, LLC
343 S. KIRKWOOD ROAD, SUITE 204
KIRKWOOD, MO 63122
T (314) 725-5889
CONTACT: BRUCE COLEMAN
E: BCOLEMAN@BRICPARTNERSHIP.COM

ARCHITECT OF RECORD:

JOHN EDWARD MUELLER
MO ARCHITECTURAL LICENSE A2010039554
MO CERTIFICATE OF AUTHORITY A2014008380

No.	Date	Description
	06/13/17	ISSUED FOR RE-BID

DRAWN BY: **SC/SH**

PROJECT NUMBER: **16-1161.03**

SHEET TITLE:
DETAILS

A-806

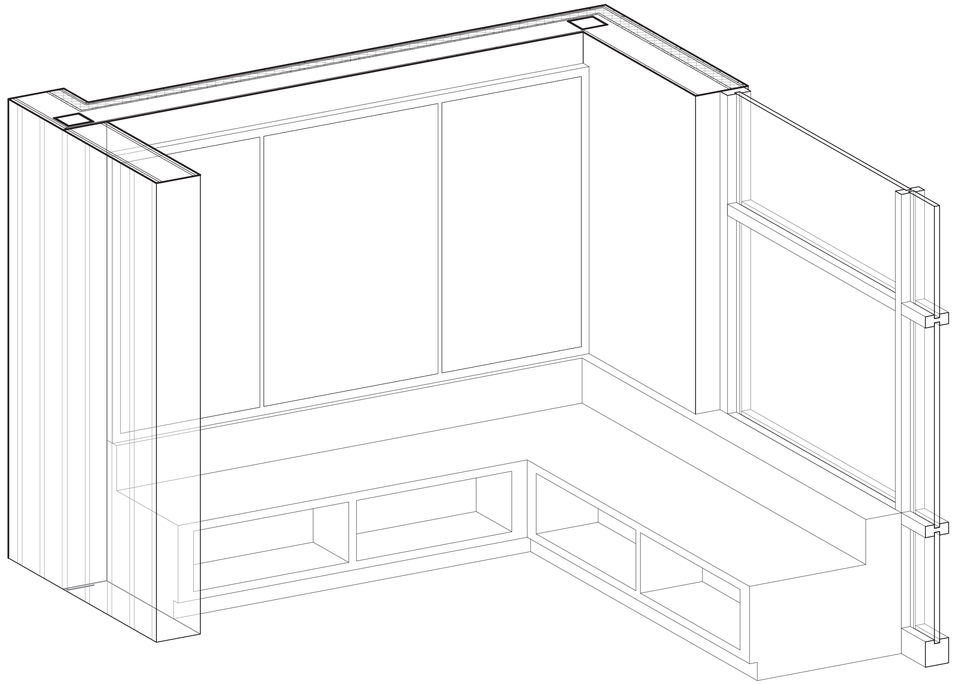

AXON VIEW @ WINDOW SEAT-ACTIVITY WALL-BULLETIN BOARD

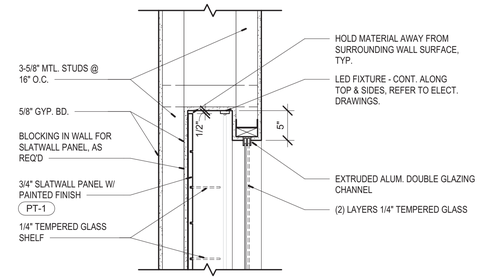

1 A-807 DETAIL @ DISPLAY CABINET
1" = 1'-0"

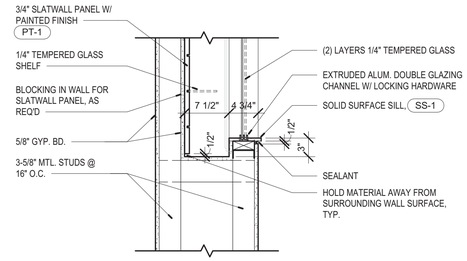

2 A-807 DETAIL @ DISPLAY CABINET
1" = 1'-0"

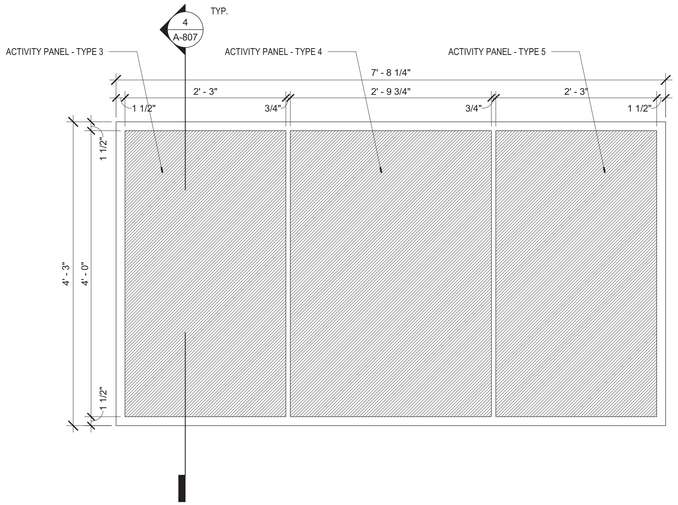

3 A-807 ELEV - ACTIVITY WALL
1" = 1'-0"

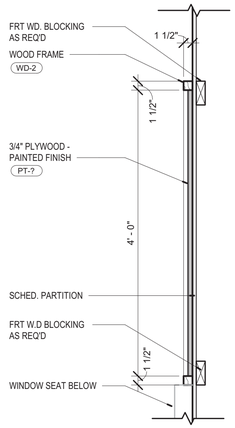

4 A-807 DETAIL - ACTIVITY WALL
1" = 1'-0"

Scenic Regional Library
read, explore, grow

SCENIC REGIONAL LIBRARY
WRIGHT CITY BRANCH
60 WILDCAT DRIVE
WRIGHT CITY, MO 63390

JEMA
SDA ARCHITECTS

ARCHITECT-OF-RECORD
JEMA
3005 LOCUST ST.
ST. LOUIS, MO 63103
T (314) 531-7400
CONTACT: SCOTT CLARK
E-MAIL: SCLARK@JEMASTL.COM

DESIGN ARCHITECT
SAPP DESIGN ASSOCIATES ARCHITECTS
3750 SOUTH FREMONT
SPRINGFIELD, MO 65804
T (417) 877-9600
F (417) 877-9696
CONTACT: JAMES STUFFLEBEAM
E: STUFFLEBEAM@SDAARCHITECTS.COM

CIVIL
COCHRAN
530A E. INDEPENDENCE DRIVE
UNION, MO 63084
CONTACT: DAVE VAN LEER
T (636) 584-0540
F (636) 584-0512
E-MAIL: DVANLEER@COCHRAN.COM

STRUCTURAL
ALPER AUDI, INC.
1804 BORMAN CIRCLE DRIVE
ST. LOUIS, MO 63146
T (314) 432-8600
F (314) 807-2774
CONTACT: STEVE EHRETT
E-MAIL: STEVE.EHRETT@ALPERAUDI.COM

MECHANICAL, ELECTRICAL, PLUMBING
BRIC PARTNERSHIP, LLC
343 S. KIRKWOOD ROAD, SUITE 204
KIRKWOOD, MO 63122
T (314) 725-5889
CONTACT: BRUCE COLEMAN
E: BCOLEMAN@BRICPARTNERSHIP.COM

ARCHITECT OF RECORD:

JOHN EDWARD MUELLER
MO ARCHITECTURAL LICENSE A2010039554
MO CERTIFICATE OF AUTHORITY A2014008380

No.	Date	Description
	06/13/17	ISSUED FOR RE-BID

DRAWN BY: **SC/SH**

PROJECT NUMBER: **16-1161.03**

SHEET TITLE:
DETAILS

A-807

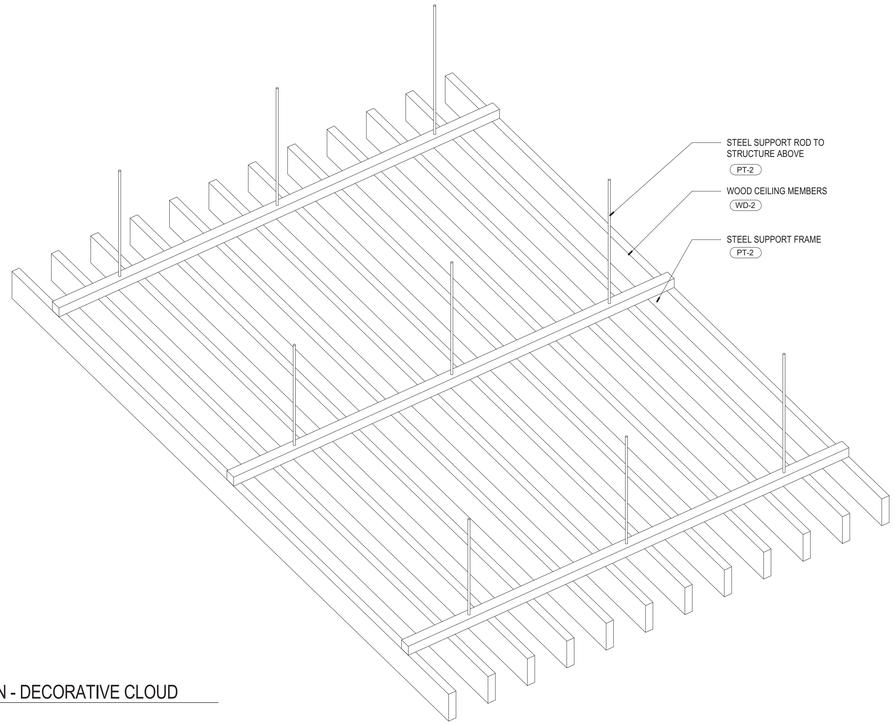

AXON - DECORATIVE CLOUD

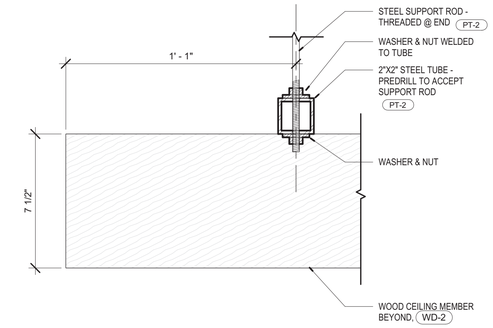

3 A-808 DETAIL - DECORATIVE WOOD BEAM
3" = 1'-0"

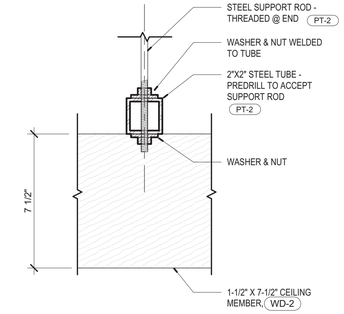

4 A-808 DETAIL - DECORATIVE WOOD BEAM
3" = 1'-0"

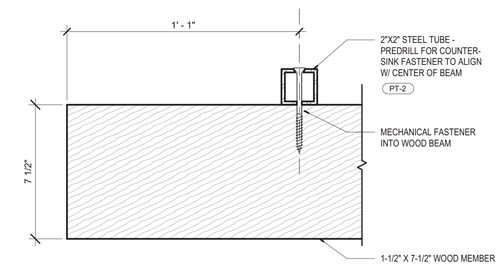

7 A-808 DETAIL - DECORATIVE WOOD BEAM
3" = 1'-0"

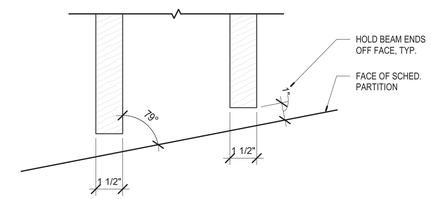

8 A-808 DETAIL @ DECORATIVE WOOD BEAM & WALL
3" = 1'-0"

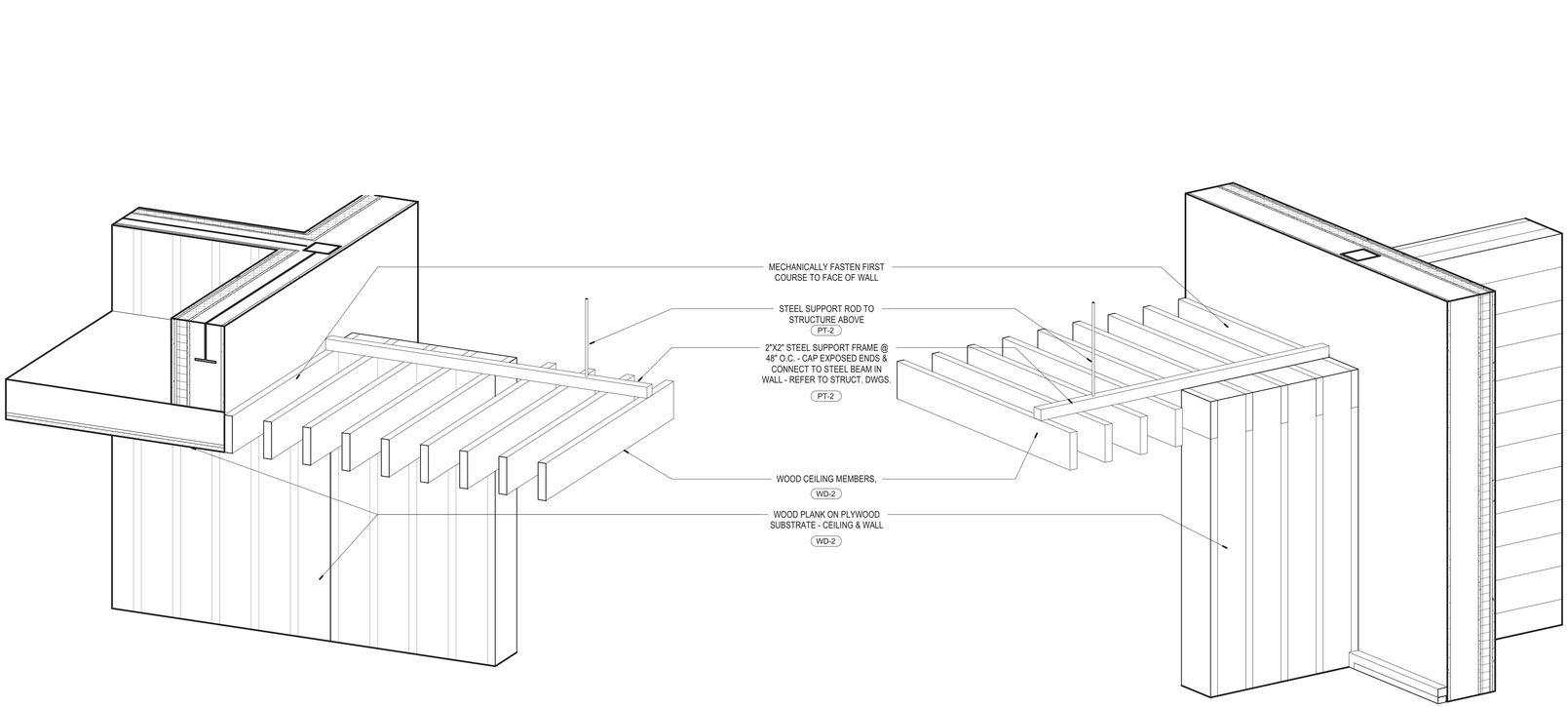

AXON VIEW @ CHILDREN'S CEILING

AXON VIEW @ CHILDREN'S CEILING

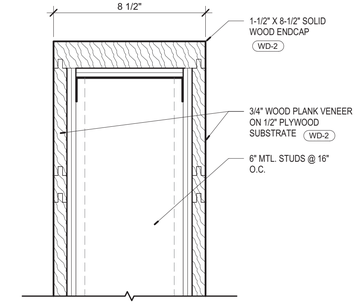

12 A-808 DETAIL - DECORATIVE WOOD BEAM
3" = 1'-0"

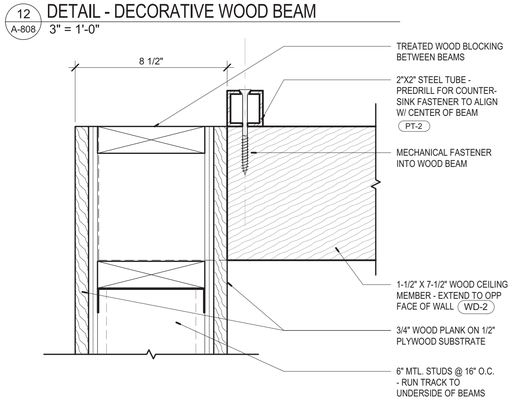

16 A-808 DETAIL - DECORATIVE WOOD BEAM
3" = 1'-0"

Scenic Regional Library
read, explore, grow

SCENIC REGIONAL LIBRARY
WRIGHT CITY BRANCH
60 WILDCAT DRIVE
WRIGHT CITY, MO 63390

JEMA
SDA ARCHITECTS

ARCHITECT-OF-RECORD
JEMA
3005 LOCUST ST.
ST. LOUIS, MO 63103
T (314) 531-7400
CONTACT: SCOTT CLARK
E-MAIL: SCLARK@JEMASTL.COM

DESIGN ARCHITECT
SAPP DESIGN ASSOCIATES ARCHITECTS
3750 SOUTH FREMONT
SPRINGFIELD, MO 65804
T (417) 877-9600
F (417) 877-9696
CONTACT: JAMES STUFFLEBEAM
E: STUFFLEBEAM@SDAARCHITECTS.COM

CIVIL
COCHRAN
530A E. INDEPENDENCE DRIVE
UNION, MO 63084
CONTACT: DAVE VAN LEER
T (636) 584-0540
F (636) 584-0512
E-MAIL: DVANLEER@COCHRAN.COM

STRUCTURAL
ALPER AUDI, INC.
1804 BORMAN CIRCLE DRIVE
ST. LOUIS, MO 63146
T (314) 432-8600
F (314) 807-2774
CONTACT: STEVE EHRETT
E-MAIL: STEVE.EHRETT@ALPERAUDI.COM

MECHANICAL, ELECTRICAL, PLUMBING
BRIC PARTNERSHIP, LLC
343 S. KIRKWOOD ROAD, SUITE 204
KIRKWOOD, MO 63122
T (314) 725-5889
CONTACT: BRUCE COLEMAN
E: BCOLEMAN@BRICPARTNERSHIP.COM

ARCHITECT OF RECORD:

JOHN EDWARD MUELLER
MO ARCHITECTURAL LICENSE A2010039554
MO CERTIFICATE OF AUTHORITY A2014008380

No.	Date	Description
	06/13/17	ISSUED FOR RE-BID

DRAWN BY: **SC/SH**

PROJECT NUMBER: **16-1161.03**

SHEET TITLE:
DETAILS

A-808

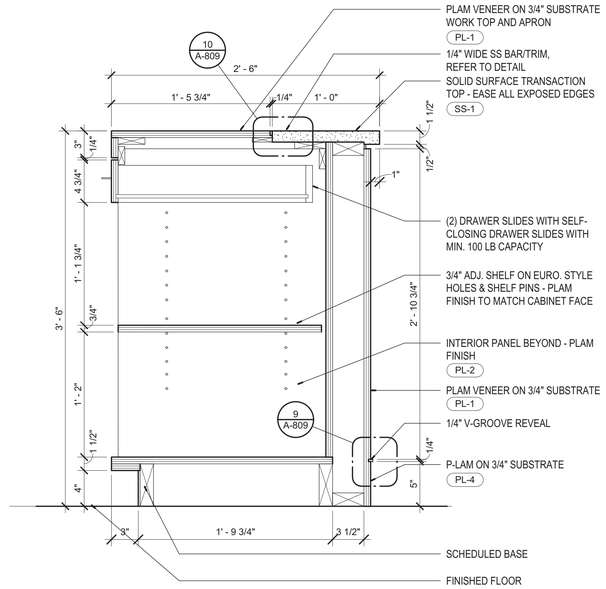

2 A-809 DETAIL - CIRCULATION DESK
1 1/2" = 1'-0" REFERENCE 5 /A-604

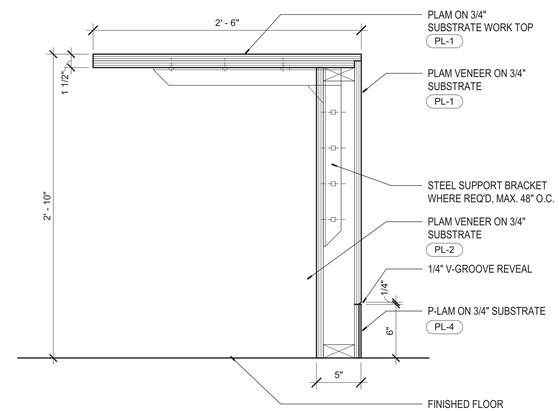

3 A-809 DETAIL - CIRCULATION DESK
1 1/2" = 1'-0" REFERENCE 2 /A-604

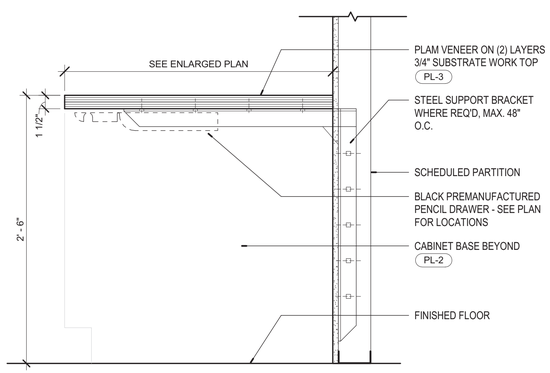

5 A-809 DETAIL - CIRCULATION DESK
1 1/2" = 1'-0" REFERENCE 2 /A-604

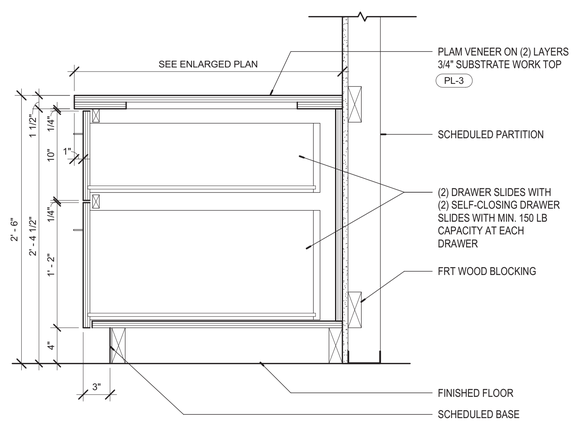

6 A-809 DETAIL - CIRCULATION DESK
1 1/2" = 1'-0" REFERENCE 2 /A-604

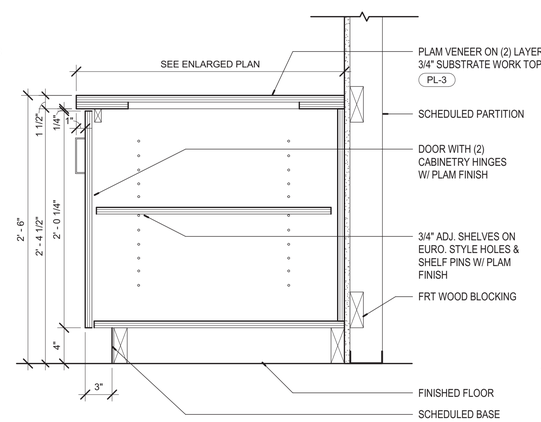

7 A-809 DETAIL - CIRCULATION DESK
1 1/2" = 1'-0" REFERENCE 2 /A-604

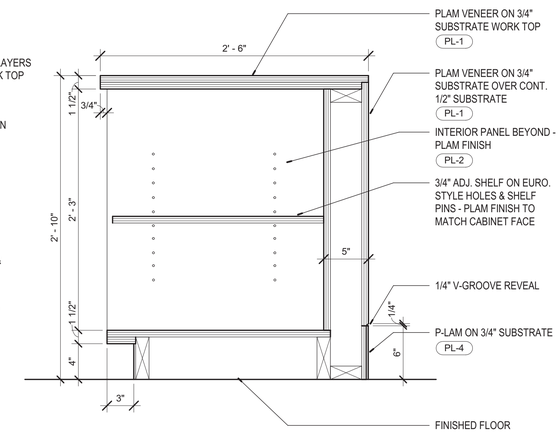

8 A-809 DETAIL - CIRCULATION DESK
1 1/2" = 1'-0" REFERENCE 2 /A-604

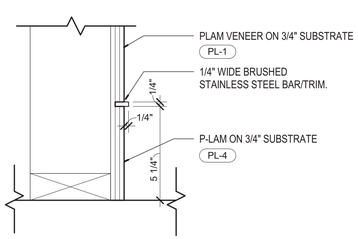

9 A-809 DETAIL - CIRCULATION DESK BASE TRIM
3" = 1'-0" REFERENCE 2 /A-809

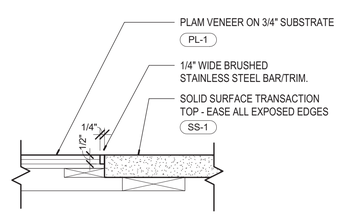

10 A-809 DETAIL - CIRCULATION DESK TOP
3" = 1'-0" REFERENCE 2 /A-809

Scenic Regional Library
read, explore, grow

SCENIC REGIONAL LIBRARY
WRIGHT CITY BRANCH
60 WILDCAT DRIVE
WRIGHT CITY, MO 63390

JEMA
SDA ARCHITECTS

ARCHITECT-OF-RECORD
JEMA
3005 LOCUST ST.
ST. LOUIS, MO 63103
T (314) 531-7400
CONTACT: SCOTT CLARK
E-MAIL: SCLARK@JEMASTL.COM

DESIGN ARCHITECT
SAPP DESIGN ASSOCIATES ARCHITECTS
3750 SOUTH FREMONT
SPRINGFIELD, MO 65804
T (417) 877-9600
F (417) 877-9696
CONTACT: JAMES STUFFLEBEAM
E: STUFFLEBEAM@SDAARCHITECTS.COM

CIVIL
COCHRAN
530A E. INDEPENDENCE DRIVE
UNION, MO 63084
CONTACT: DAVE VAN LEER
T (636) 584-0540
F (636) 584-0512
E-MAIL: DVANLEER@COCHRAN.COM

STRUCTURAL
ALPER AUDI, INC.
1804 BORMAN CIRCLE DRIVE
ST. LOUIS, MO 63146
T (314) 432-8600
F (314) 807-2774
CONTACT: STEVE EHRETT
E-MAIL: STEVE.EHRETT@ALPERAUDI.COM

MECHANICAL, ELECTRICAL, PLUMBING
BRIC PARTNERSHIP, LLC
343 S. KIRKWOOD ROAD, SUITE 204
KIRKWOOD, MO 63122
T (314) 725-5889
CONTACT: BRUCE COLEMAN
E: BCOLEMAN@BRICPARTNERSHIP.COM

ARCHITECT OF RECORD:

JOHN EDWARD MUELLER
MO ARCHITECTURAL LICENSE A2010039554
MO CERTIFICATE OF AUTHORITY A2014008380

No.	Date	Description
	06/13/17	ISSUED FOR RE-BID

DRAWN BY: **SC/SH**

PROJECT NUMBER: **16-1161.03**

SHEET TITLE:
DETAILS - MILLWORK

A-809

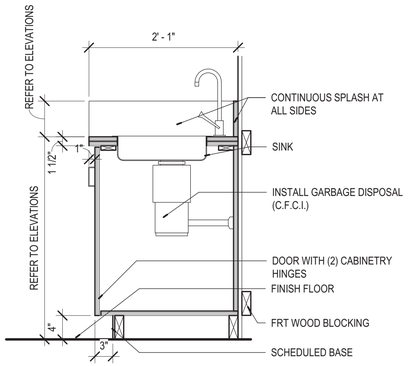

1 A-810 DETAIL - BASE CABINET W/NON-COMPLIANT SINK
1" = 1'-0" REFERENCE 3 /A-605

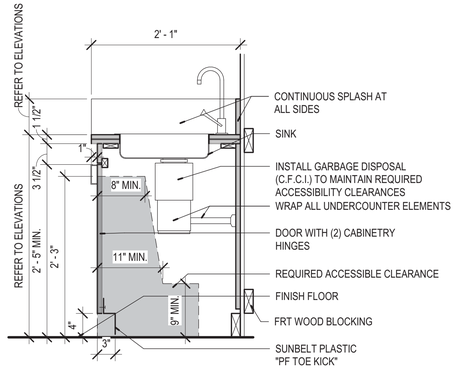

2 A-810 DETAIL - BASE CABINET WITH SINK & DISPOSAL
1" = 1'-0" REFERENCE 1 /A-604

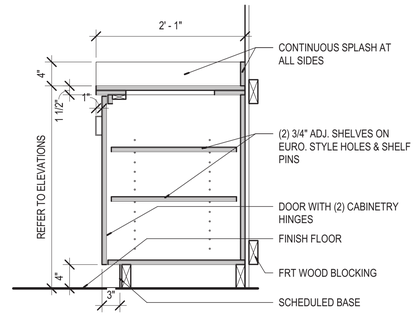

3 A-810 DETAIL - BASE CABINET
1" = 1'-0" REFERENCE 1 /A-604

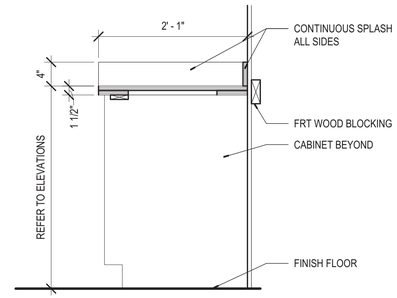

5 A-810 DETAIL - BASE CABINET - OPEN
1" = 1'-0" REFERENCE 3 /A-605

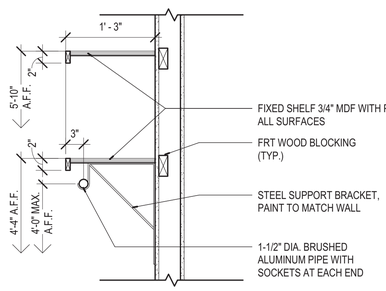

6 A-810 DETAIL - COAT ROD & SHELF
1" = 1'-0" REFERENCE 3 /A-605

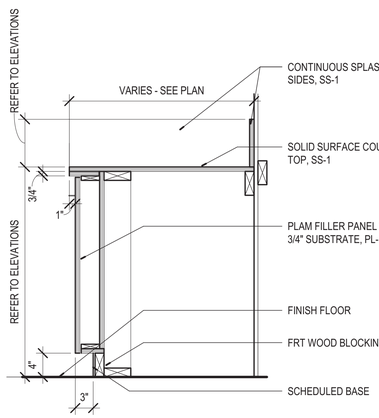

7 A-810 DETAIL - BASE CABINET
1" = 1'-0" REFERENCE 6 /A-605

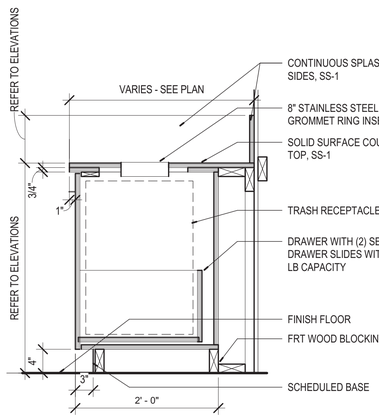

8 A-810 DETAIL - BASE CABINET
1" = 1'-0" REFERENCE 6 /A-605

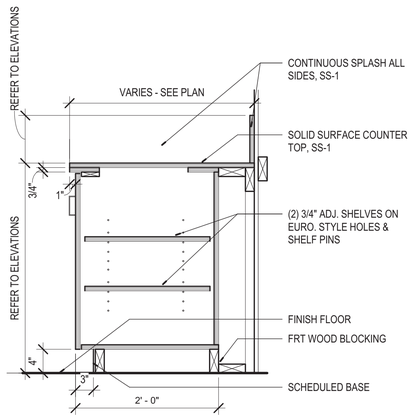

9 A-810 DETAIL - BASE CABINET
1" = 1'-0" REFERENCE 6 /A-605

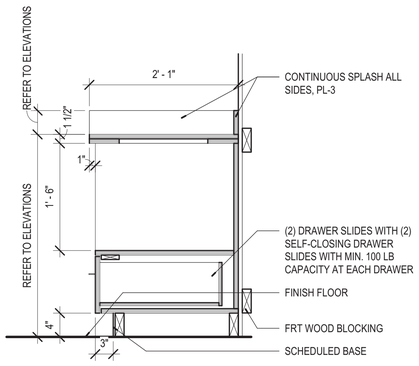

10 A-810 DETAIL - BASE CABINET WITH OPEN SHELF & DRAWER
1" = 1'-0" REFERENCE 1 /A-604

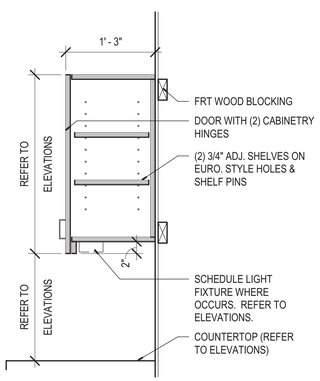

11 A-810 DETAIL - UPPER CABINET
1" = 1'-0" REFERENCE 1 /A-604

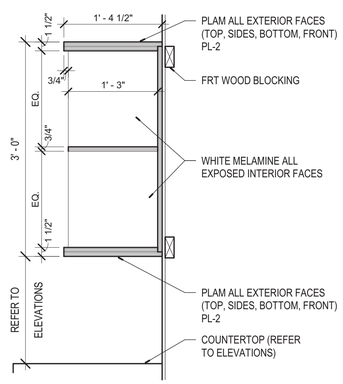

12 A-810 DETAIL - UPPER CABINET
1" = 1'-0" REFERENCE 2 /A-604

Scenic Regional Library
read, explore, grow

SCENIC REGIONAL LIBRARY
WRIGHT CITY BRANCH
60 WILDCAT DRIVE
WRIGHT CITY, MO 63390

JEMA
SDA ARCHITECTS

ARCHITECT-OF-RECORD
JEMA
3005 LOCUST ST.
ST. LOUIS, MO 63103
T (314) 531-7400
CONTACT: SCOTT CLARK
E-MAIL: SCLARK@JEMASTL.COM

DESIGN ARCHITECT
SAPP DESIGN ASSOCIATES ARCHITECTS
3750 SOUTH FREMONT
SPRINGFIELD, MO 65804
T (417) 877-9600
F (417) 877-9696
CONTACT: JAMES STUFFLEBEAM
E: STUFFLEBEAM@SDAARCHITECTS.COM

CIVIL
COCHRAN
530A E. INDEPENDENCE DRIVE
UNION, MO 63084
CONTACT: DAVE VAN LEER
T (636) 584-0540
F (636) 584-0512
E-MAIL: DVANLEER@COCHRAN.COM

STRUCTURAL
ALPER AUDI, INC.
1804 BORMAN CIRCLE DRIVE
ST. LOUIS, MO 63146
T (314) 432-9600
F (314) 807-2774
CONTACT: STEVE EHRETT
E-MAIL: STEVE.EHRETT@ALPERAUDI.COM

MECHANICAL, ELECTRICAL, PLUMBING
BRIC PARTNERSHIP, LLC
343 S. KIRKWOOD ROAD, SUITE 204
KIRKWOOD, MO 63122
T (314) 725-5889
CONTACT: BRUCE COLEMAN
E: BCOLEMAN@BRICPARTNERSHIP.COM

ARCHITECT OF RECORD:

JOHN EDWARD MUELLER
MO ARCHITECTURAL LICENSE A2010039554
MO CERTIFICATE OF AUTHORITY A2014008380

No.	Date	Description
	06/13/17	ISSUED FOR RE-BID

DRAWN BY: **SC/SH**

PROJECT NUMBER: **16-1161.03**

SHEET TITLE:
DETAILS - MILLWORK

A-810

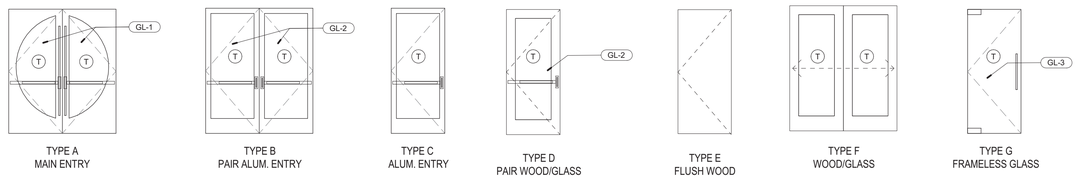

TYPE A
MAIN ENTRY

TYPE B
PAIR ALUM. ENTRY

TYPE C
ALUM. ENTRY

TYPE D
PAIR WOOD/GLASS

TYPE E
FLUSH WOOD

TYPE F
WOOD/GLASS

TYPE G
FRAMELESS GLASS

DOOR TYPES
1/4" = 1'-0"

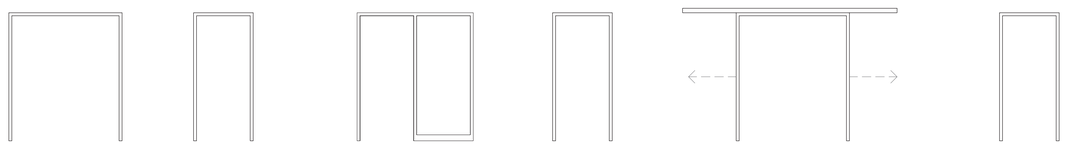

TYPE 1
ALUMINUM FRAME

TYPE 2
ALUMINUM FRAME

TYPE 3
HOLLOW METAL FRAME

TYPE 4
HOLLOW METAL FRAME

TYPE 5
HOLLOW METAL CASED OPENING
OVERHEAD SLIDING DOOR RAIL

TYPE 6
INSULATED HOLLOW METAL EXT. FRAME

FRAME TYPES
1/4" = 1'-0"

DOOR SCHEDULE

DOOR NUMBER	WIDTH	HEIGHT	DOOR THICKNESS	DOOR TYPE	DOOR MATERIAL	FRAME TYPE	FRAME FINISH	HDWR. GROUP	FIRE RATING	REMARKS
400A	PR 3' - 0"	7' - 0"	1 3/4"	A	ALUM.	1	PRE-FINISHED	1.0 AO		CUSTOM COLOR TO MATCH SAMPLE, SEE SPECS.
400B	PR 3' - 0"	7' - 0"	1 3/4"	B	ALUM.	1	PRE-FINISHED	4.0 AO		
401	3' - 0"	7' - 0"	1 3/4"	D	WD-1/GL	3	PT-3	6.0		
402	3' - 0"	7' - 0"	1 3/4"	E	WD-1	4	PT-3	13.0		SEE NOTE 1 BELOW, INSTALL RESTROOM SIDE.
403	3' - 0"	7' - 0"	1 3/4"	E	WD-1	4	PT-3	13.0		SEE NOTE 1 BELOW, INSTALL RESTROOM SIDE.
404	3' - 0"	7' - 0"	1 3/4"	C	ALUM.	2	PRE-FINISHED	2.0		
404B	PR 3' - 0"	7' - 0"	1 3/4"	F	WD-1/GL	5	PT-3	5.0		PAIR OF SLIDERS ON RAIL
406	3' - 6"	7' - 0"	1 3/4"	E	WD-1	4	PT-3	7.0	45 MINUTE	
407	3' - 0"	7' - 0"	1 3/4"	C	ALUM.	2	PRE-FINISHED	2.0		
408	3' - 0"	7' - 0"	1 3/4"	C	ALUM.	2	PRE-FINISHED	2.0		
412	3' - 0"	7' - 0"	1 3/4"	E	WD-1	4	PT-3	11.0		
413	3' - 0"	7' - 0"	1/2"	G	GL	N/A	N/A	14.0		FLOOR AND HEAD PIVOTS, SEE SPECS.
414	3' - 0"	7' - 0"	1/2"	G	GL	N/A	N/A	14.0		FLOOR AND HEAD PIVOTS, SEE SPECS.
416	3' - 0"	7' - 0"	1 3/4"	E	WD-1	4	PT-3	10.0	45 MINUTE	
417	3' - 0"	7' - 0"	1 3/4"	E	WD-1	4	PT-3	9.0		
418	3' - 0"	7' - 0"	1 3/4"	C	ALUM.	2	PRE-FINISHED	2.0		
419	3' - 0"	7' - 0"	1 3/4"	E	WD-1	4	PT-3	9.0		
420	3' - 0"	7' - 0"	1 3/4"	E	WD-1	4	PT-3	12.0	45 MINUTE	

DOOR HARDWARE NOTES:

1. PROVIDE FOOT OPERATED DOOR OPENER, STEPNPULL, IN SILVER FINISH FOR THIS DOOR.

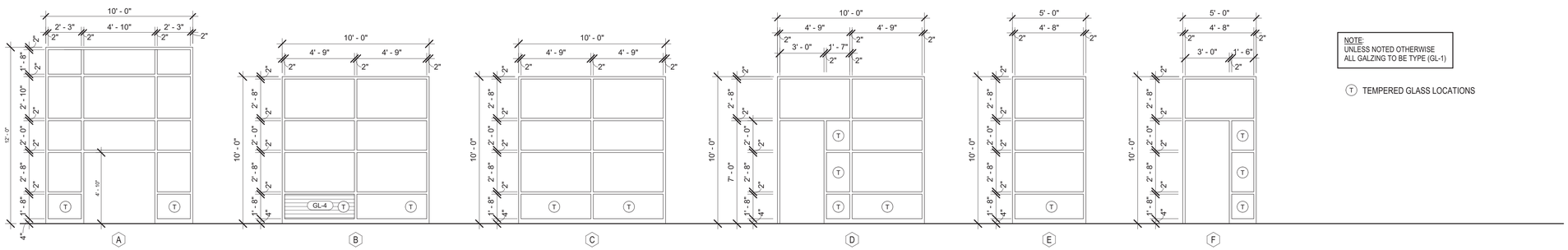

NOTE:
UNLESS NOTED OTHERWISE
ALL GALZING TO BE TYPE (GL-1)

(T) TEMPERED GLASS LOCATIONS

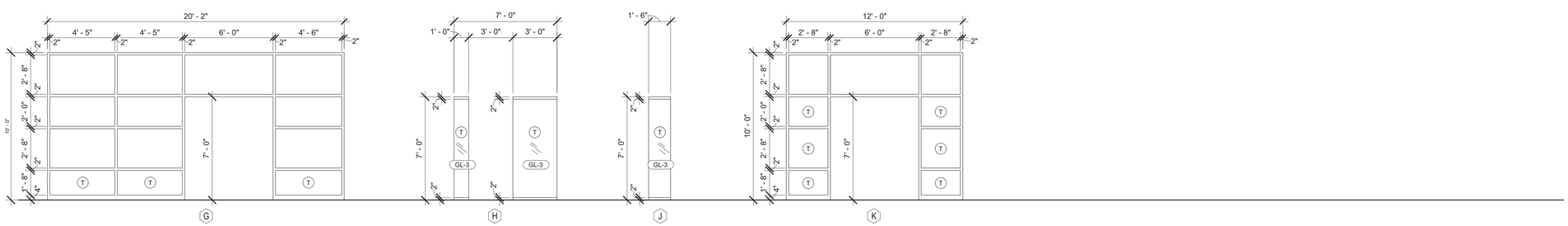

WINDOW TYPES
1/4" = 1'-0"

Scenic Regional Library
read, explore, grow

SCENIC REGIONAL LIBRARY
WRIGHT CITY BRANCH
60 WILDCAT DRIVE
WRIGHT CITY, MO 63390

JEMA
SDA ARCHITECTS

ARCHITECT-OF-RECORD
JEMA
3005 LOCUST ST.
ST. LOUIS, MO 63103
T (314) 531-7400
CONTACT: SCOTT CLARK
E-MAIL: SCLARK@JEMASTL.COM

DESIGN ARCHITECT
SAPP DESIGN ASSOCIATES ARCHITECTS
3750 SOUTH FREMONT
SPRINGFIELD, MO 65804
T (417) 877-9600
F (417) 877-9696
CONTACT: JAMES STUFFLEBEAM
E: STUFFLEBEAM@SDAARCHITECTS.COM

CIVIL
COCHRAN
530A E. INDEPENDENCE DRIVE
UNION, MO 63084
CONTACT: DAVE VAN LEER
T (636) 584-0540
F (636) 584-0512
E-MAIL: DVANLEER@COCHRAN.COM

STRUCTURAL
ALPER AUDI, INC.
1804 BORMAN CIRCLE DRIVE
ST. LOUIS, MO 63146
T (314) 432-8600
F (314) 807-2774
CONTACT: STEVE EHRETT
E-MAIL: STEVE.EHRETT@ALPERAUDI.COM

MECHANICAL, ELECTRICAL, PLUMBING
BRIC PARTNERSHIP, LLC
343 S. KIRKWOOD ROAD, SUITE 204
KIRKWOOD, MO 63122
T (314) 725-5889
CONTACT: BRUCE COLEMAN
E: BCOLEMAN@BRICPARTNERSHIP.COM

ARCHITECT OF RECORD:

JOHN EDWARD MUELLER
MO ARCHITECTURAL LICENSE A2010039554
MO CERTIFICATE OF AUTHORITY A2014008380

No.	Date	Description
	06/13/17	ISSUED FOR RE-BID

DRAWN BY: **SC/SH**

PROJECT NUMBER: **16-1161.03**

SHEET TITLE:
DOOR SCHEDULE / DOOR, FRAME AND WINDOW TYPES

A-901

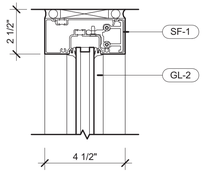

1 A-902 HEAD MULLION
3" = 1'-0"

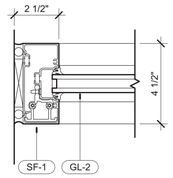

2 A-902 JAMB MULLION
3" = 1'-0"

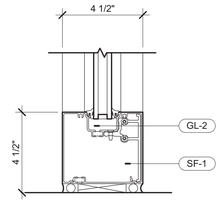

3 A-902 SILL MULLION
3" = 1'-0"

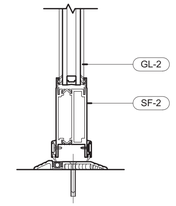

4 A-902 DOOR SILL
3" = 1'-0"

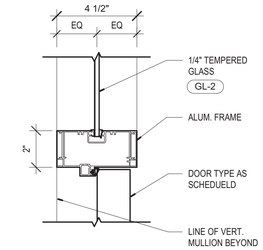

5 A-902 MULLION / DOOR JAMB
3" = 1'-0"

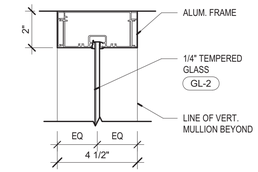

6 A-902 MULLION / DOOR JAMB
3" = 1'-0"

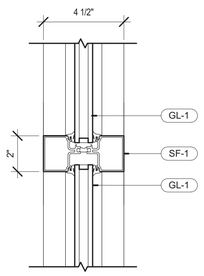

7 A-902 INNER MULLION
3" = 1'-0"

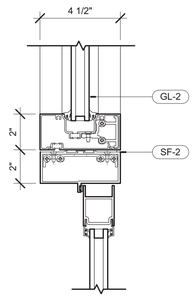

8 A-902 INNER MULLION / DOOR HEAD
3" = 1'-0"

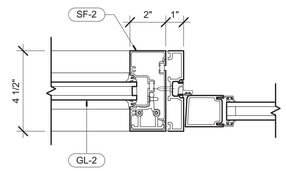

9 A-902 INNER MULLION / DOOR JAMB
3" = 1'-0"

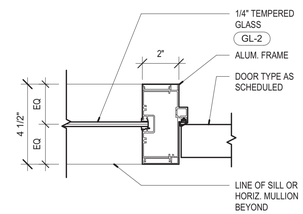

10 A-902 MULLION / DOOR JAMB
3" = 1'-0"

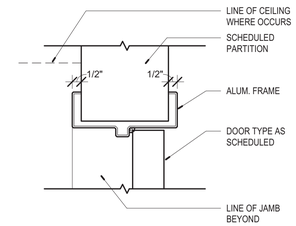

11 A-902 DOOR HEAD (TYP)
3" = 1'-0"

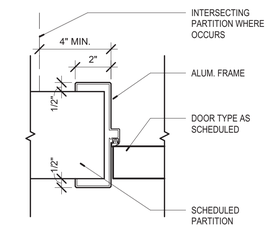

12 A-902 DOOR JAMB (TYP)
3" = 1'-0"

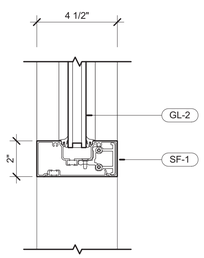

13 A-902 INNER MULLION
3" = 1'-0"

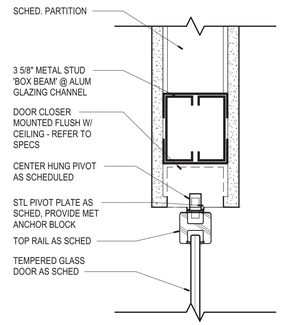

15 A-902 DETAIL @ GLASS DOOR HEAD
3" = 1'-0"

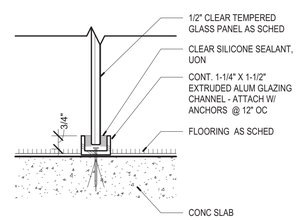

16 A-902 DETAIL @ GLASS PANEL SILL
3" = 1'-0"

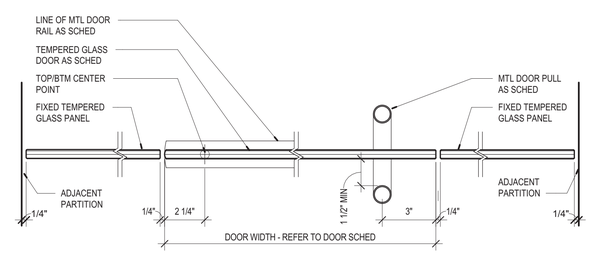

17 A-902 JAMB DETAIL @ TEMPERED GLASS DOOR
3" = 1'-0"

Scenic Regional Library
read, explore, grow

SCENIC REGIONAL LIBRARY
WRIGHT CITY BRANCH
60 WILDCAT DRIVE
WRIGHT CITY, MO 63390

JEMA
SDA ARCHITECTS

ARCHITECT-OF-RECORD
JEMA
3005 LOCUST ST.
ST. LOUIS, MO 63103
T (314) 531-7400
CONTACT: SCOTT CLARK
E-MAIL: SCLARK@JEMASTL.COM

DESIGN ARCHITECT
SAPP DESIGN ASSOCIATES ARCHITECTS
3750 SOUTH FREMONT
SPRINGFIELD, MO 65804
T (417) 877-9600
F (417) 877-9696
CONTACT: JAMES STUFFLEBEAM
E: STUFFLEBEAM@SDAARCHITECTS.COM

CIVIL
COCHRAN
530A E. INDEPENDENCE DRIVE
UNION, MO 63084
CONTACT: DAVE VAN LEER
T (636) 584-0540
F (636) 584-0512
E-MAIL: DVANLEER@COCHRAN.COM

STRUCTURAL
ALPER AUDI, INC.
1804 BORMAN CIRCLE DRIVE
ST. LOUIS, MO 63146
T (314) 432-8600
F (314) 807-2774
CONTACT: STEVE EHRETT
E-MAIL: STEVE.EHRETT@ALPERAUDI.COM

MECHANICAL, ELECTRICAL, PLUMBING
BRIC PARTNERSHIP, LLC
343 S. KIRKWOOD ROAD, SUITE 204
KIRKWOOD, MO 63122
T (314) 725-5889
CONTACT: BRUCE COLEMAN
E: BCOLEMAN@BRICPARTNERSHIP.COM

ARCHITECT OF RECORD:

JOHN EDWARD MUELLER
MO ARCHITECTURAL LICENSE A2010039554
MO CERTIFICATE OF AUTHORITY A2014008380

No.	Date	Description
	06/13/17	ISSUED FOR RE-BID

DRAWN BY: **SC/SH**

PROJECT NUMBER: **16-1161.03**

SHEET TITLE:
FRAME DETAILS

A-902

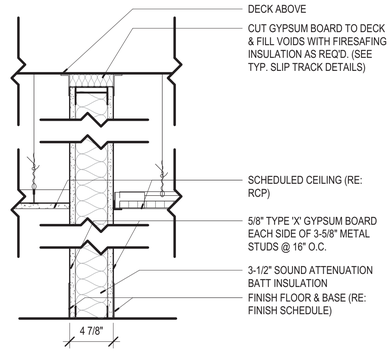

1A 4-7/8" PARTITION (1-HOUR) U.L. DESIGN #U-419

SCALE: 1-1/2" = 1'-0"

1B 4-7/8" PARTITION (GYP. TO DECK)

SIMILAR TO TYPE P1A, WITH THE FOLLOWING CHANGES:
- PROVIDE TYPICAL GYPSUM BOARD IN LIEU OF TYPE 'X'
- OMIT SLIP TRACK AND FIRESAFING INSULATION.

1C 4-7/8" PARTITION

SIMILAR TO TYPE 1B, WITH THE FOLLOWING CHANGES:
- GYPSUM BOARD ONLY EXTENDS TO TOP OF GYPSUM CEILING OR 6" ABOVE DROP CEILING
- SOUND ATTENUATION BATT INSULATION TO 6" ABOVE CEILING AND MIN. 2'-0" ON EITHER SIDE OF PARTITION
- BRACE PARTITION TO STRUCTURE ABOVE AT MAX. 8'-0" O.C.

1D 4-7/8" PARTITION (GYP. TO DECK - 1 SIDE)

SIMILAR TO TYPE 1B, WITH THE FOLLOWING CHANGES:
- EXTEND GYPSUM BOARD TO DECK ON SIDE OF PARTITION WITH NO CEILING. ON SIDE OF PARTITION WITH CEILING, EXTEND GYPSUM BOARD TO TOP OF GYPSUM CEILING OR 6" ABOVE DROP CEILING.
- SOUND ATTENUATION BATT INSULATION TO 6" ABOVE CEILING AND MIN. 2'-0" ON SIDE OF PARTITION WITH CEILING

1E 4-7/8" PARTITION (TO CEILING)

SIMILAR TO TYPE 1C, WITH THE FOLLOWING CHANGES:
- NO SOUND ATTENUATION BATTS

1F 4-7/8" PARTITION (GYP. TO DECK - 1 SIDE)

SIMILAR TO TYPE 1C, WITH THE FOLLOWING CHANGES:
- NO SOUND ATTENUATION BATTS

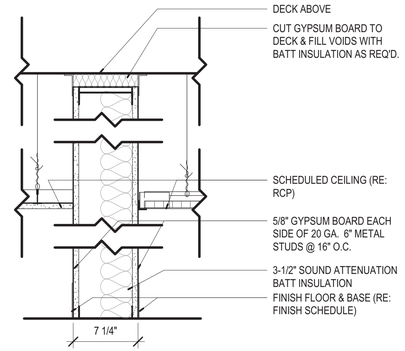

2A 7-1/4" PARTITION (GYP. TO DECK)

SCALE: 1-1/2" = 1'-0"

2B 7-1/4" PARTITION

SIMILAR TO TYPE 2a, WITH THE FOLLOWING CHANGES:
- GYPSUM BOARD ONLY EXTENDS TO TOP OF GYPSUM CEILING OR 6" ABOVE DROP CEILING
- SOUND ATTENUATION BATT INSULATION TO 6" ABOVE CEILING AND MIN. 2'-0" ON EITHER SIDE OF PARTITION
- BRACE PARTITION TO STRUCTURE ABOVE AT MAX. 8'-0" O.C.

2C 7-1/4" PARTITION (1-HOUR) U.L. DESIGN #U-419

SIMILAR TO TYPE 2a, WITH THE FOLLOWING CHANGES:
- TYPE "X" GYPSUM BOARD.
- SLIP TRACK AND FIRESAFING INSULATION.

2D 7-1/4" PARTITION (TO CEILING)

SIMILAR TO TYPE 2a, WITH THE FOLLOWING CHANGES:
- GYPSUM BOARD ONLY EXTENDS TO SCHEDULED CEILING
- BRACE PARTITION TO STRUCTURE ABOVE AT MAX. 8'-0" O.C.

2E 8-1/2" PARTITION

SIMILAR TO TYPE 2a, WITH THE FOLLOWING CHANGES:
- 1/2" PLYWOOD SHEATHING BOTH SIDES IN LIEU OF GYPSUM BOARD
- 3/4" WOOD PLANK BOTH SIDES
- NO SOUND ATTENUATION BATTS

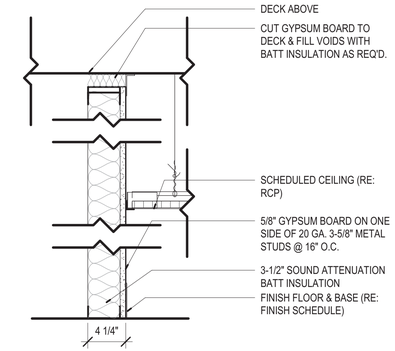

3A 4-1/4" PARTITION (GYP. TO DECK)

SCALE: 1 1/2" = 1'-0"

3B 4-1/4" PARTITION

SIMILAR TO TYPE 3a, WITH THE FOLLOWING CHANGES:
- STOP PARTITION INSULATION AT TOP OF GYPSUM BOARD
- EXTEND GYPSUM BOARD TO TOP OF GYPSUM CEILING OR MIN. 6" ABOVE DROP CEILING
- BRACE PARTITION TO DECK AT MAX. 8'-0" O.C. IF NOT USED AS FURRING WALL

3C 4-1/4" PARTITION (TO CEILING)

SIMILAR TO TYPE 3b, WITH THE FOLLOWING CHANGES:
- NO SOUND ATTENUATION BATTS

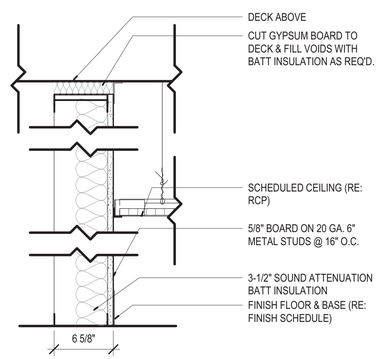

4A 6-5/8" PARTITION (GYP. TO DECK)

SCALE: 1 1/2" = 1'-0"

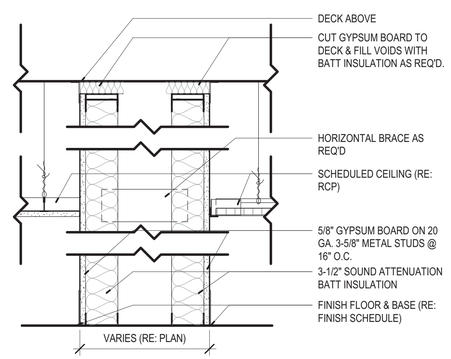

5A CHASE PARTITION (GYP. TO DECK)

SCALE: 1 1/2" = 1'-0"

5B CHASE PARTITION

SIMILAR TO TYPE 5a, WITH THE FOLLOWING CHANGES:
- PROVIED CEMETITIOUS BACKER BOARD UP TO 48" A.F.F.
- EXTEND GYPSUM BOARD TO TOP OF GYPSUM CEILING OR MIN 6" ABOVE DROP CEILING
- SOUND ATTENUATION BATT INSULATION TO 6" ABOVE CEILING AND MIN. 2'-0" ON EITHER SIDE OF PARTITION

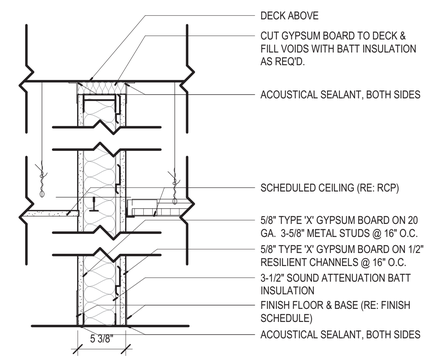

6A 5-3/8" PARTITION (ACOUSTIC) STC 50

SCALE: 1-1/2" = 1'-0"

6B 7-3/4" PARTITION (ACOUSTIC) STC 56

SIMILAR TO TYPE 6a, WITH THE FOLLOWING CHANGES:
- USE 20 GA. 6" METAL STUDS IN LIEU OF 3-5/8" METAL STUDS
- USE 5" THERMAFIBER SAFB SOUND ATTENUATION BATT INSULATION

Scenic Regional Library
read, explore, grow

SCENIC REGIONAL LIBRARY
WRIGHT CITY BRANCH
60 WILDCAT DRIVE
WRIGHT CITY, MO 63390

JEMA
SDA ARCHITECTS

ARCHITECT-OF-RECORD
JEMA
3005 LOCUST ST.
ST. LOUIS, MO 63103
T (314) 531-7400
CONTACT: SCOTT CLARK
E-MAIL: SCLARK@JEMASTL.COM

DESIGN ARCHITECT
SAPP DESIGN ASSOCIATES ARCHITECTS
3750 SOUTH FREMONT
SPRINGFIELD, MO 65804
T (417) 877-9600
F (417) 877-9696
CONTACT: JAMES STUFFLEBEAM
E: STUFFLEBEAM@SDAARCHITECTS.COM

CIVIL
COCHRAN
530A E. INDEPENDENCE DRIVE
UNION, MO 63084
CONTACT: DAVE VAN LEER
T (636) 584-0540
F (636) 584-0512
E-MAIL: DVANLEER@COCHRAN.COM

STRUCTURAL
ALPER AUDI, INC.
1804 BORMAN CIRCLE DRIVE
ST. LOUIS, MO 63146
T (314) 432-8600
F (314) 807-2774
CONTACT: STEVE EHRETT
E-MAIL: STEVE.EHRETT@ALPERAUDI.COM

MECHANICAL, ELECTRICAL, PLUMBING
BRIC PARTNERSHIP, LLC
343 S. KIRKWOOD ROAD, SUITE 204
KIRKWOOD, MO 63122
T (314) 725-5889
CONTACT: BRUCE COLEMAN
E: BCOLEMAN@BRICPARTNERSHIP.COM

ARCHITECT OF RECORD:

JOHN EDWARD MUELLER
MO ARCHITECTURAL LICENSE A2010039554
MO CERTIFICATE OF AUTHORITY A2014008380

No.	Date	Description
	06/13/17	ISSUED FOR RE-BID

DRAWN BY: **SC/SH**

PROJECT NUMBER: **16-1161.03**

SHEET TITLE:
PARTITION TYPES

A-903

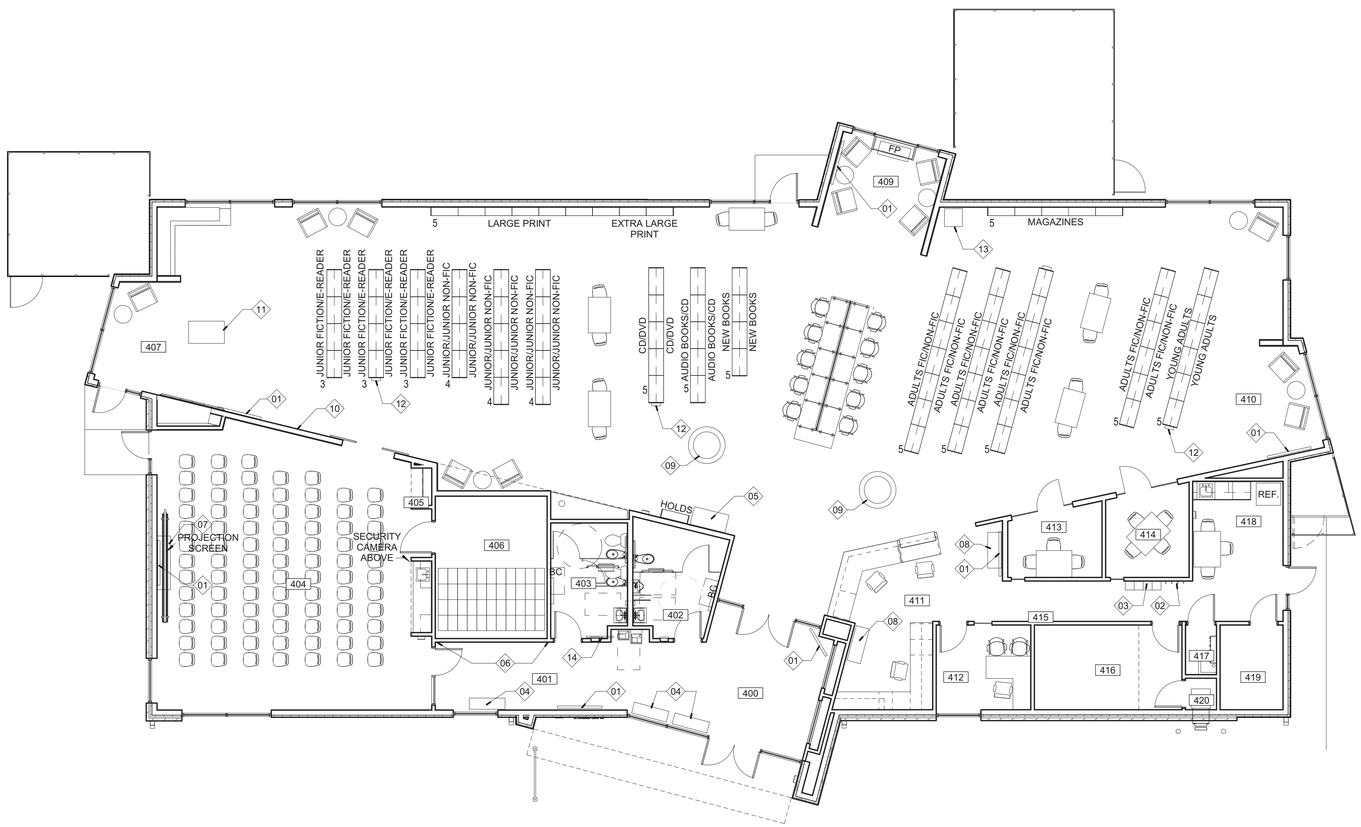

PLAN NORTH

1 / F-101 FURNITURE PLAN
1/8" = 1'-0"

GENERAL NOTES - FURNITURE PLAN

1. ALL LIBRARY SHELVING INDICATED IS OFOI,SHOWN FOR REFERENCE.
2. ALL FURNITURE INDICATED IS OFOI, SHOWN FOR REFERENCE.
3. ALL APPLIANCES INDICATED ARE OFOI, SHOWN FOR REFERENCE.

KEYED NOTES - FURNITURE PLAN

Keynote Number	Description
01	WALL-MOUNTED DISPLAY, DISPLAY AND MOUNTING BRACKET OFCI.
02	COAT HOOKS, CFCI, SEE SPECIFICATIONS.
03	LOCKERS, CFCI, SEE SPECIFICATIONS.
04	BENCH, OFOI.
05	SELF SERVE KIOSK, OFOI.
06	DONOR WALL, ALL ITEMS PLAQUES ETC, OFOI.
07	GAMING CABINET, OFOI.
08	CART, OFOI.
09	TIERED BOOK DISPLAY, OFOI.
10	BULLETIN BOARD, OFCI.
11	I-PAD TABLE, OFOI.
12	OPAC UNIT, OFOI.
13	NEWSPAPER DISPLAY, OFOI.
14	LOCKING BULLETING BOARD CABINET, CFCI. REFER TO SPECS.

ROOM SCHEDULE

Number	Name
400	VESTIBULE
401	CORRIDOR
402	MENS
403	WOMENS
404	MEETING ROOM
405	COATS
406	STORAGE
407	CHILDREN AREA
408	CIRCULATION
409	ADULT AREA
410	TEEN AREA
411	WORK ROOM
412	OFFICE
413	STUDY
414	STUDY
415	CORRIDOR
416	STORAGE
417	JANITORS CLOSET
418	BREAK ROOM
419	MECH / ELEC
420	BOOK DROP

Scenic Regional Library
read, explore, grow

SCENIC REGIONAL LIBRARY
WRIGHT CITY BRANCH
60 WILDCAT DRIVE
WRIGHT CITY, MO 63390

JEMA
SDA ARCHITECTS

ARCHITECT-OF-RECORD
JEMA
3005 LOCUST ST.
ST. LOUIS, MO 63103
T (314) 531-7400
CONTACT: SCOTT CLARK
E-MAIL: SCLARK@JEMASTL.COM

DESIGN ARCHITECT
SAPP DESIGN ASSOCIATES ARCHITECTS
3750 SOUTH FREMONT
SPRINGFIELD, MO 65804
T (417) 877-9600
F (417) 877-9696
CONTACT: JAMES STUFFLEBEAM
E: STUFFLEBEAM@SDAARCHITECTS.COM

CIVIL
COCHRAN
530A E. INDEPENDENCE DRIVE
UNION, MO 63084
CONTACT: DAVE VAN LEER
T (636) 584-0540
F (636) 584-0512
E-MAIL: DVANLEER@COCHRAN.COM

STRUCTURAL
ALPER AUDI, INC.
1804 BORMAN CIRCLE DRIVE
ST. LOUIS, MO 63146
T (314) 432-8600
F (314) 807-2774
CONTACT: STEVE EHRETT
E-MAIL: STEVE.EHRETT@ALPERAUDI.COM

MECHANICAL, ELECTRICAL, PLUMBING
BRIC PARTNERSHIP, LLC
343 S. KIRKWOOD ROAD, SUITE 204
KIRKWOOD, MO 63122
T (314) 725-5889
CONTACT: BRUCE COLEMAN
E: BCOLEMAN@BRICPARTNERSHIP.COM

ARCHITECT OF RECORD:

JOHN EDWARD MUELLER
MO ARCHITECTURAL LICENSE A2010039554
MO CERTIFICATE OF AUTHORITY A2014008380

No.	Date	Description
	06/13/17	ISSUED FOR RE-BID

DRAWN BY: **SC/SH**

PROJECT NUMBER: **16-1161.03**

SHEET TITLE:
FURNITURE PLAN - FIRST FLOOR

F-101

GENERAL NOTES:

DESIGN CRITERIA:

A. CODES AND STANDARDS:

2009 INTERNATIONAL BUILDING CODE (I.B.C.)
BUILDING OCCUPANCY CATEGORY: II

B. DESIGN LOADS:

ROOF:
SUPERIMPOSED DEAD LOADS:

ROOFING: 3 PSF
INSULATION: 4 PSF
METAL DECK: 3 PSF
CEILINGS: 2 PSF
MEP: 4 PSF
SPRINKLER LIVE LOADS: 4 PSF

LIVE LOADS:

MINIMUM LIVE LOAD: 23 PSF

SNOW LOADS:

SNOW LOAD IMPORTANCE FACTOR: I = 1.0
GROUND SNOW LOAD: Pg = 20 PSF
FLAT ROOF SNOW LOAD: Pf = 14 PSF
SNOW EXPOSURE FACTOR: Ce = 1.0
THERMAL FACTOR: Ct = 1.0

WIND DESIGN DATA:

WIND LOAD IMPORTANCE FACTOR: I = 1.0
BASIC WIND SPEED: 90 MPH
WIND EXPOSURE: C
INTERNAL PRESSURE COEFFICIENT: +/- 0.18
COMPONENTS AND CLADDING: (0.10 SF):
ZONE 1: -19.9 PSF / +10 PSF
ZONE 2: -23.0 PSF / +10 PSF
ZONE 3: -30.8 PSF / +10 PSF
ZONE 4: -18.2 PSF / +16.8 PSF
ZONE 5: -22.4 PSF / +16.8 PSF

SEISMIC DESIGN DATA:

SEISMIC IMPORTANCE FACTOR: I = 1.0
MAPPED SPECTRAL RESPONSE ACCELERATIONS: Ss = 34.2 / S1 = 12.3%
SITE CLASS: C
SPECTRAL RESPONSE COEFFICIENTS: Sds = 27.4% / Sd1 = 13.7%
SEISMIC DESIGN CATEGORY: C
BASIC STRUCTURAL SYSTEM: STRUCTURAL STEEL SYSTEM
BASIC SEISMIC FORCE-RESISTING SYSTEM(S):
STRUCTURAL STEEL SYSTEM NOT SPECIFICALLY DETAILED FOR SEISMIC RESISTANCE.
RESPONSE MODIFICATION FACTOR: R = 3
SEISMIC RESPONSE COEFFICIENT: Cs = 0.091
DESIGN BASE SHEAR: V = 20K
ANALYSIS PROCEDURE USED: EQUIVALENT LATERAL FORCE

FOUNDATIONS:

DESIGN:

1. THE FOUNDATION HAS BEEN DESIGNED IN ACCORDANCE WITH THE RECOMMENDATIONS MADE IN THE "SOILS AND FOUNDATION INVESTIGATION" BY COCHRAN, DATED NOVEMBER 2016.

2. BACKFILLING:

A. DO NOT BACKFILL BASEMENT WALLS AND GRADE BEAMS UNTIL BRACING FLOORS ARE IN PLACE OR ADEQUATE TEMPORARY BRACING IS INSTALLED.

B. BACKFILL UNDER FOUNDATIONS WITH CONCRETE OR AS APPROVED BY GEOTECHNICAL ENGINEER.

SPREAD FOOTINGS:

1. FOOTINGS SHALL BEAR ON FIRM NATURAL SOIL OR ENGINEERED FILL CAPABLE OF SUSTAINING A NET BEARING PRESSURE OF 2000 PSF, UNDER FULL SERVICE LIVE AND DEAD LOADS.

2. TOP OF FOOTING (T/F) ELEVATIONS ARE SHOWN ON THE PLANS.

3. FOOTINGS SHALL BE POURED INTO AN EARTH-FORMED TRENCH U.N.O.. CONTRACTOR TO PROVIDE ADDITIONAL CONCRETE REQUIRED DUE TO SOIL CHARACTERISTICS OR SLOPE OF EXCAVATIONS.

4. ALL BEARING MATERIAL SHALL BE INSPECTED BY THE GEOTECHNICAL ENGINEER PRIOR TO CONCRETE PLACEMENT. THE GEOTECHNICAL ENGINEER SHALL BE THE SOLE JUDGE AS TO THE SUITABILITY OF THE BEARING MATERIAL. FOOTING ELEVATIONS SHALL BE ADJUSTED AS REQUIRED.

5. BOTTOM OF EXTERIOR FOOTINGS SHALL BEAR A MINIMUM OF 30" BELOW FINAL GRADE FOR FROST PROTECTION.

FOUNDATION / RETAINING WALLS:

1. ACTIVE DESIGN PRESSURE IS EQUAL TO AN EQUIVALENT FLUID PRESSURE OF 50 PCF

2. AT-REST DESIGN PRESSURE IS EQUAL TO AN EQUIVALENT FLUID PRESSURE OF 70 PCF

3. PASSIVE DESIGN PRESSURE IS EQUAL TO AN EQUIVALENT FLUID PRESSURE OF 250 PCF

4. SURCHARGE LOADS ARE 100 PSF AT THE SURFACE.

5. COEFFICIENT OF SLIDING FRICTION:

CONCRETE/SOIL = 0.35 (ASSUMED)

6. FOUNDATION WALLS THAT RETAIN EARTH SHALL BE BRACED AGAINST BACKFILLING PRESSURES UNTIL FLOOR SLABS AT TOP AND BOTTOM ARE IN PLACE.

7. WHERE FOUNDATION WALLS ARE TO HAVE EARTH PLACED ON EACH SIDE, PLACE FILL SIMULTANEOUSLY SO AS TO MAINTAIN A COMMON ELEVATION ON EACH SIDE OF THE WALL.

8. DO NOT BACKFILL UNTIL CONCRETE HAS REACHED ITS 28 DAY STRENGTH.

CONCRETE:

1. CONCRETE SHALL CONFORM WITH THE REQUIREMENTS SET FORTH IN A.C.I. 301 AND SHALL HAVE A 28-DAY COMPRESSIVE STRENGTH AND DENSITY, IN ACCORDANCE WITH THE FOLLOWING:

INTENDED USE	28 DAY STRENGTH f'c (K.S.I.)	CONCRETE DENSITY	MAXIMUM W/C (INCLUDING FLY ASH)	MINIMUM CEMENT MATERIAL (#/CY INCLUDING FLY ASH)	MAXIMUM AGGREGATE (IN.)	SLUMP LIMITS (IN.) (+0", -2")	TOTAL AIR LIMITS (%0) (B)	REQUIRED ADMIXTURES (C)
FOOTINGS	4	145	0.48	564	1	4	-	-
FOUNDATION WALLS	4	145	0.48	564	3/4	4	-	-
CONCRETE EXPOSED TO DEICERS	4	145	0.40	564	3/4	4	6	AE, WR
INTERIOR SLABS ON GRADE	4	145	0.50	564	1	4	N	-
ALL CONCRETE NOT OTHERWISE SPECIFIED	4	145	0.40	564	3/4	4	6	-

NOTES:

A. FOR MAXIMUM COARSE AGGREGATE SIZE INDICATED, USE THE FOLLOWING AGGREGATE SIZE NUMBERS PER A.S.T.M. C33:

3/8" - #8 AGGREGATE
3/4" - #67 AGGREGATE
1" - #57 AGGREGATE
1 1/2" - #467 AGGREGATE

B. TOTAL AIR CONTENT LIMITS INCLUDE BOTH ENTRAINED AND ENTRAPPED AIR +/- 1 1/2%. "N" IN COLUMN INDICATES ADDITION OF ENTRAINED AIR IS NOT PERMITTED.

C. ABBREVIATIONS FOR REQUIRED ADMIXTURES AS FOLLOWS: AE - AIR-ENTRAINING ADMIXTURE, WR - WATER REDUCING ADMIXTURE

D. MAXIMUM SHRINKAGE FOR SLAB ON GRADE SHALL BE LIMITED TO 5/8" PER 100 FOOT.

2. REINFORCING SHALL CONFORM TO A.S.T.M. A615, GR. 60, INCLUDING TIES AND STIRRUPS. BARS REQUIRING WELDING OR FIELD BENDING SHALL BE A.S.T.M. A706, GRADE 60.

3. WELDED WIRE FABRIC SHALL CONFORM TO A.S.T.M. A185.

4. LAP SPLICES SHALL BE IN ACCORDANCE WITH THE FOLLOWING TABLE, UNLESS NOTED OTHERWISE. WHERE CLASSES ARE NOT CALLED OUT ON DRAWINGS, USE CLASS "B" SPLICES.

SPLICES f'c = 4000 P.S.I., fy = 60,000 P.S.I.

STANDARD TENSION LAP SPLICE, GRADE 60													
CLASS A and B LAP SPLICE LENGTH (INCHES)													
BAR SIZE	CLASS	f'c = 3,000 P.S.I.				f'c = 4,000 P.S.I.				f'c = 5,000 P.S.I.			
		A		B		A		B		A		B	
	CASE	1	2	1	2	1	2	1	2	1	2	1	2
#3		16	25	21	32	14	21	18	28	13	19	17	25
#4		22	33	28	43	19	28	25	37	17	25	22	33
#5		27	41	36	53	24	36	31	46	21	32	28	41
#6		33	49	43	64	28	43	37	55	25	38	33	50
#7		48	72	62	93	42	62	54	81	37	56	48	72
#8		55	82	71	107	47	71	62	92	42	64	55	83
#9		62	93	80	120	54	80	70	104	48	72	62	93
#10		70	104	90	136	60	90	78	117	54	81	70	105
#11		77	116	100	151	67	100	87	130	60	90	78	117

"TOP BARS" ARE DEFINED AS ANY BAR WITH MORE THAN 12" OF CONCRETE CAST BELOW THE BAR, SEE NOTE 4 IN TABLE NOTES.

COMPRESSION LAP SCHEDULE	
LAP LENGTH (INCHES)	
f'c = 3,000 P.S.I. OR GREATER	
BAR SIZE	30 BAR DIA.
#3	12
#4	15
#5	19
#6	22
#7	26
#8	29
#9	33
#10	37
#11	41

TABLE NOTES:

1. TABLES ARE BASED A.C.I. 318. WHERE CLEAR SPACING OF BARS BEING DEVELOPED OR SPLICED IS AT LEAST 2 BAR DIAMETERS AND THE CLEAR COVER AT LEAST 1 BAR DIAMETER, USE CASE 1. USE CASE 2 FOR OTHER BAR ARRANGEMENTS.

2. ALL SPLICES TO BE CLASS "B" TENSION SPLICE UNLESS OTHERWISE NOTED.

3. SPLICE PLAIN WELDED WIRE FABRIC BY LAPPING ONE FULL MESH SPACE PLUS 2 INCHES.

4. FOR TOP BARS, MULTIPLY LENGTHS IN TABLE BY 1.3.

5. FOR EPOXY COATED REINFORCEMENT, MULTIPLY LENGTHS IN TABLE BY 1.5 FOR COVER LESS THAN 3db OR CLEAR SPACING LESS THAN 6db, MULTIPLY LENGTHS BY 1.2 FOR ALL OTHER EPOXY COATED REINFORCEMENT.

6. FOR LIGHT WEIGHT CONCRETE, MULTIPLY LENGTHS IN TABLE BY 1.3.

7. COMPRESSION DOWEL EMBEDMENT: 22 BAR DIAMETERS

5. ALL REINFORCING SHALL BE DETAILED, FABRICATED AND PLACED, IN ACCORDANCE WITH THE LATEST EDITION OF THE A.C.I. DETAILING MANUAL.

6. ALL REINFORCING SHALL BE SUPPORTED IN FORMS, SPACED WITH NECESSARY ACCESSORIES AND SHALL BE SECURELY WIRED TOGETHER, IN ACCORDANCE WITH C.R.S.I. "REINFORCING BAR DETAILING", LATEST EDITION.

7. MINIMUM CONCRETE COVER, UNLESS NOTED OTHERWISE:

A. UNFORMED SURFACE IN CONTACT WITH THE GROUND: 3 IN.

B. FORMED SURFACES EXPOSED TO EARTH OR WEATHER: 1 1/2 IN. FOR #5 BAR OR SMALLER, 2 IN. FOR #6 BAR OR LARGER

C. FORMED SURFACES NOT EXPOSED TO EARTH OR WEATHER: WALLS, SLABS: 3/4 IN., BEAMS, GIRDERS AND COLUMNS (TO TIES OR STIRRUPS): 1 1/2 IN.

CONCRETE NOTES (CONT):

8. ALL CONSTRUCTION JOINTS SHOWN ON DRAWINGS SHALL BE INCORPORATED INTO THE STRUCTURE, UNLESS THEIR ELIMINATION IS APPROVED BY THE ENGINEER. ADDITIONAL CONSTRUCTION JOINTS, REQUIRED TO FACILITATE CONSTRUCTION, SHALL BE LOCATED AT POINTS OF MINIMUM SHEAR AND SHALL BE DETAILED ON SHOP DRAWINGS WITH LOCATIONS SUBJECT TO APPROVAL BY ENGINEER. REINFORCEMENT SHALL PASS CONTINUOUSLY THROUGH THE JOINT.

9. ALL ABUTTING CONCRETE MEMBERS SHALL BE DOWELED TOGETHER, UNLESS POURED MONOLITHICALLY. DOWELS SHALL BE EQUAL IN SIZE AND SPACING TO THE REINFORCING IN THE ADJACENT MEMBER.

10. UNLESS OTHERWISE SHOWN IN THE ARCHITECTURAL DRAWINGS, PROVIDE 3/4" CHAMFERS AT ALL EDGES THAT ARE EXPOSED TO VIEW IN THE FINISHED STRUCTURE.

11. SEE ARCHITECTURAL DRAWINGS FOR DOOR AND WINDOW OPENINGS, DRIP SLOTS, REGLETS, MASONRY ANCHORS, PRECAST BEARING LEDGES, BRICK LEDGE ELEVATIONS AND FOR MISCELLANEOUS EMBEDDED PLATES, BOLTS, ANCHORS, ANGLES, ETC.

12. REFER TO ARCHITECTURAL DRAWINGS FOR CONCRETE FINISHES. WHERE FINISH IS NOT SPECIFIED, CONFORM TO REQUIREMENTS OF A.C.I. 301.

13. MECHANICAL, PLUMBING, AND ELECTRICAL DRAWINGS SHALL BE REFERRED TO FOR DRAINS, SLEEVES, OUTLET BOXES, CONDUIT, ANCHORS, ETC. THE VARIOUS TRADES ARE RESPONSIBLE FOR PLACING THEIR ITEMS.

14. REFER TO MECHANICAL DRAWINGS FOR HOUSEKEEPING PADS AND INERTIA BASES AT MECHANICAL EQUIPMENT.

15. PROVIDE CONCRETE EQUIPMENT PADS, INERTIA BASES AND CURBS AS NOTED ELSEWHERE IN CONTRACT DOCUMENTS. UNLESS NOTED, DOWEL PADS WITH HOOKED #4 x 0'-6" PROJECTING 3" FROM CONCRETE BELOW AT 18"O.C. EACH WAY. REINFORCE PADS WITH #4@18 EACH WAY, TOP AND BOTTOM, UNLESS OTHERWISE REQUIRED BY EQUIPMENT ANCHORAGE DESIGN.

16. REFER TO MECHANICAL DRAWINGS FOR UNDERFLOOR AND PERIMETER FOUNDATION DRAINS.

17. BASE PLATES, ANCHOR BOLTS, SUPPORT ANGLES, ETC., BELOW GRADE SHALL BE COVERED WITH A MINIMUM OF 3" CONCRETE.

18. PROVIDE CONTINUOUS WATERSTOP AT HORIZONTAL AND VERTICAL JOINTS BELOW GRADE.

19. SHORING OF COMPOSITE BEAMS AND GIRDERS IS THE RESPONSIBILITY OF THE CONCRETE CONTRACTOR. SEE COMPOSITE BEAM AND DECK NOTES FOR SHORING REQUIREMENTS.

20. FILL SLABS INDICATED ON THE STRUCTURAL DRAWINGS SHALL BE REINFORCED WITH 6x6-W1.4xW1.4 W.W.F., UNLESS NOTED OTHERWISE. SEE ARCHITECTURAL DRAWINGS FOR PLAN DIMENSIONS, THICKNESSES, SLOPES TO DRAIN, ETC.

21. WHERE REINFORCING IS NOT INDICATED OR DEFINED, INCLUDE FOR BID PURPOSES ONLY:

A. WALLS: #5 EACH WAY EACH FACE. SPACING IN INCHES = 140 / (WALL THICKNESS IN INCHES) BUT NOT OVER 18"O.C.

B. BEAMS: 1-#9 CONTINUOUS TOP AND BOTTOM FOR EACH 100 SQUARE INCHES OF BEAM CROSS SECTIONAL AREA AND #4 STIRRUPS SPACED AT 1/4 OF BEAM DEPTH FULL LENGTH OF BEAM.

C. COLUMNS: 1-#9 VERTICAL PER 50 SQUARE INCHES OF CROSS SECTIONAL AREA AND #3 TIES @ 9"O.C.

D. SLABS: #5 EACH WAY TOP AND BOTTOM. SPACING IN INCHES = 100/(SLAB THICKNESS IN INCHES) BUT NOT OVER 18"O.C.

ON SHOP DRAWINGS, INDICATE ABOVE REINFORCING AS "PER GENERAL NOTES". SUCH REINFORCING MAY BE REVISED OR RELOCATED BY STRUCTURAL ENGINEER DURING SHOP DRAWING REVIEW.

22. MASONRY DOWELS: PROVIDE, PLACE, AND SPACE TO MATCH MASONRY REINFORCING.

23. PROVIDE STANDARD HOOKS ON BARS TERMINATING AT A CONCRETE FACE UNLESS NOTED (E.G.: EDGES OF OPENINGS, SLAB EDGES, EXPANSION JOINTS, ENDS OF BEAMS, AND AT: TOP, BOTTOM AND ENDS OF WALLS, ETC...).

24. PROVIDE (2)#5 (MINIMUM) @ EACH SIDE OF OPENING. EXTEND 2'-0" BEYOND OPENINGS.

STRUCTURAL STEEL:

1. STEEL SHALL CONFORM TO THE FOLLOWING GRADES:

ALL WIDE FLANGE (U.N.O.): A992 GRADE 50 (Fy=50)
ALL CHANNEL, ANGLE, BASE PLATES, CONNECTION. PLATES (U.N.O.): A36 (Fy=36)
STRUCTURAL PIPE: A53 (Fy=35)
STRUCTURAL HSS RECTANGULAR TUBE: A500 GRADE B (Fy=46)
STRUCTURAL HSS ROUND TUBE: A500 GRADE B (Fy=42)

2. ALL STRUCTURAL STEEL SHALL BE DETAILED, FABRICATED AND ERECTED IN ACCORDANCE WITH THE LATEST EDITION OF THE A.I.S.C. CODE OF STANDARD PRACTICE, EXCEPT AS MODIFIED IN THESE NOTES AND THE PROJECT SPECIFICATIONS.

3. CONNECTIONS MAY BE BOLTED OR WELDED. THE FABRICATOR IS RESPONSIBLE FOR THE DESIGN OF CONNECTIONS NOT DESIGNED ON THE DRAWINGS. GENERALLY, CONNECTIONS SHOWN ON THE STRUCTURAL DRAWINGS ARE SCHEMATIC AND ARE ONLY INTENDED TO SHOW THE RELATIONSHIP OF MEMBERS CONNECTED. ANY CONNECTION THAT IS NOT SHOWN OR IS NOT COMPLETELY DETAILED ON THE STRUCTURAL DRAWINGS SHALL BE DESIGNED BY A PROFESSIONAL ENGINEER, REGISTERED IN THE STATE OF THE PROJECT, RETAINED BY THE FABRICATOR. COMPLETELY DETAILED MEANS THE FOLLOWING INFORMATION IS SHOWN ON THE DETAIL:

A. ALL PLATE DIMENSIONS AND GRADES.

B. ALL WELD SIZES, LENGTHS, PITCHES, AND RETURNS.

C. ALL HOLE SIZES AND SPACINGS.

D. NUMBER AND TYPES OF BOLTS: WHERE BOLTS ARE SHOWN BUT NO NUMBER IS GIVEN, THE CONNECTION HAS NOT BEEN COMPLETELY DETAILED.

E. WHERE PARTIAL INFORMATION IS GIVEN, IT SHALL BE THE MINIMUM REQUIREMENT FOR THE CONNECTION.

PRIOR TO FABRICATION, PROVIDE (FOR RECORD COPY) DESIGN CALCULATIONS FOR TYPICAL BEAM CONNECTIONS, ALL PRIMARY BRACING AND HANGER CONNECTIONS, SIGNED AND SEALED BY A PROFESSIONAL ENGINEER REGISTERED IN THE STATE OF THE PROJECT SHALL BE SUBMITTED TO THE ENGINEER.

STRUCTURAL STEEL (CONT):

4. CONNECTION DESIGN FORCES:

A. UNLESS REACTIONS ARE SHOWN, FACTORED BEAM CONNECTIONS SHALL BE DESIGNED FOR THE GREATER OF:

55% OF MAXIMUM TOTAL UNIFORM LOAD FROM A.I.S.C. 13TH EDITION MAXIMUM TOTAL UNIFORM LOAD TABLES

15 KIPS

B. MOMENT CONNECTIONS INDICATED ON THE DRAWINGS THUS: ---<H>--- DESIGN FOR MOMENT SHOWN OR, IF NOT SHOWN, DEVELOP THE FULL PLASTIC MOMENT CAPACITY OF MEMBER.

C. MAINTAIN TENSION CAPACITY OF COLUMNS, DIAGONALS AND MEMBERS SUBJECT TO TENSION AT BOLT HOLES, NOTCHES, OR COPES.

D. CONNECTION FORCE NOTATION:

P = AXIAL FORCE IN KIPS: (+) TENSION, (-) COMPRESSION
V OR [ ] = SHEAR IN KIPS
M = MOMENT IN FOOT KIPS
T = TORSION IN FOOT KIPS

E. LOADS SHOWN INCLUDE COMPENSATION FOR CODE PERMITTED STRESS INCREASES AND LOAD REDUCTIONS FOR CONNECTION DESIGN.

5. THE MINIMUM PLATE THICKNESS SHALL BE 3/8".

6. BOLTED CONNECTIONS:

A. MINIMUM BOLT DIAMETER = 3/4"

B. SLIP CRITICAL CONNECTIONS OF A325SC OR A490SC BOLTS SHALL BE USED FOR ALL BOLTED CONNECTIONS OF BRACING MEMBERS, MOMENT CONNECTIONS, CANTILEVERS, AND AS SHOWN ON THE DRAWINGS. OVERSIZED AND LONG-SLOTTED HOLES ARE ALLOWED FOR SLIP CRITICAL CONNECTIONS.

C. ALL OTHER BOLTED CONNECTIONS SHALL BE BEARING TYPE USING A325N OR A490N BOLTS. OVERSIZED HOLES AND LONG-SLOTTED HOLES ARE NOT ALLOWED UNLESS SHOWN ON THE DRAWINGS.

D. A307 BOLTS MAY BE USED WHERE INDICATED ON THE DRAWINGS.

E. PROTRUDING BOLT HEADS, SHAFTS OR NUTS SHALL NOT EXTEND INTO NOR PROHIBIT THE APPLICATION OF ARCHITECTURAL FINISHES AND THEY SHALL NOT EXTEND INTO NOR PROHIBIT THE PLACEMENT OF STEEL DECKING TO THE CORRECT LINE AND ELEVATION.

F. THE FABRICATOR IS RESPONSIBLE FOR VERIFYING THE TENSION CAPACITY OF AXIALLY LOADED MEMBERS AFTER A SECTION IS REDUCED FOR BOLT HEADS. MEMBER SIZE MAY BE INCREASED OR CONNECTION PLATES ADDED AS REQUIRED.

G. SHOP DRAWINGS SHALL INDICATE THE TYPE OF BOLT USED IN EACH CONNECTION AND THE ALLOWABLE VALUES USED FOR THE VARIOUS BOLT TYPES.

7. WELDED CONNECTIONS:

A. WELDS ARE CONTINUOUS UNLESS NOTED.

B. ALL FILLET WELDS: A.I.S.C. MINIMUM BUT NOT LESS THAN 1/4" UNLESS NOTED OTHERWISE.

C. ALL WELDING SHALL BE IN ACCORDANCE WITH THE CURRENT "STRUCTURAL WELDING CODE" (A.W.S. D1.1) PUBLISHED BY THE AMERICAN WELDING SOCIETY. ELECTRODES FOR WELDING SHALL COMPLY WITH THE REQUIREMENTS OF TABLE 4.1.1 OF (A.W.S. D1.1).

D. ALL GROOVE WELDS SHALL BE COMPLETE PENETRATION UNLESS NOTED OTHERWISE.

8. SPLICING OF STEEL MEMBERS, UNLESS SHOWN ON THE DRAWINGS, IS PROHIBITED WITHOUT WRITTEN APPROVAL OF THE ARCHITECT.

9. NO CHANGE IN SIZE OR POSITION OF THE STRUCTURAL ELEMENTS SHALL BE MADE AND HOLES, SLOTS, CUTS, ETC., ARE NOT PERMITTED THROUGH ANY MEMBER UNLESS THEY ARE DETAILED ON THE APPROVED SHOP DRAWINGS.

10. NO FINAL BOLTING OR WELDING SHALL BE MADE UNTIL AS MUCH OF THE STRUCTURE AS WILL BE STIFFENED THEREBY HAS BEEN PROPERLY ALIGNED.

11. UNLESS NOTED OTHERWISE, BEAMS SHALL BEAR 8" MINIMUM ON CONCRETE OR MASONRY. ANCHOR BEAMS TO MASONRY OR CONCRETE WITH 2-3/4" DIA. ANCHOR BOLTS OR WELDED TO EMBED PLATE.

12. FABRICATE ALL BEAMS WITH THE MILL CAMBER UP.

13. SHEAR STUDS: CONFORM TO A.W.S. D1.1-98, SHOP WELD EXCEPT WHERE APPLIED THROUGH METAL DECK.

14. HEADED STUDS SHALL CONFORM TO A.S.T.M. A108, GRADE 1015, WELDABLE (Fy = 65 K.S.I.).

15. WHERE FIREPROOFING IS REQUIRED, ADJUST FIREPROOFING THICKNESS BASED ON MEMBER SIZES. SEE ARCHITECTURAL DRAWINGS FOR FIREPROOFING REQUIREMENTS AND THICKNESS.

16. THE FABRICATOR IS RESPONSIBLE FOR THE DESIGN AND DETAILING OF STEEL STAIRS. STAIRS SHOWN ON THE STRUCTURAL DRAWINGS ARE SCHEMATIC AND ARE ONLY INTENDED TO SHOW THE RELATIONSHIP OF MEMBERS CONNECTED. STAIRS SHALL BE DESIGNED BY A PROFESSIONAL ENGINEER REGISTERED IN THE STATE OF THE PROJECT, RETAINED BY THE FABRICATOR.

Scenic Regional Library
read, explore, grow

SCENIC REGIONAL LIBRARY
WRIGHT CITY BRANCH
60 WILDCAT DRIVE
WRIGHT CITY, MO 63390

JEMA learning architecture interior design
SDA ARCHITECTS

ARCHITECT-OF-RECORD
JEMA
3005 LOCUST ST.
ST. LOUIS, MO 63103
T (314) 531-7400
CONTACT: SCOTT CLARK
E-MAIL: SCLARK@JEMASTL.COM

DESIGN ARCHITECT
SAPP DESIGN ASSOCIATES ARCHITECTS
3750 SOUTH FREMONT
SPRINGFIELD, MO 65804
T (417) 877-9600
F (417) 877-9696
CONTACT: JAMES STUFFLEBEAM
E: STUFFLEBEAM@SDAARCHITECTS.COM

CIVIL
COCHRAN
530A E. INDEPENDENCE DRIVE
UNION, MO 63084
CONTACT: DAVE VAN LEER
T (636) 584-0540
F (636) 584-0512
E-MAIL: DVANLEER@COCHRAN.COM

STRUCTURAL
ALPER AUDI, INC.
1804 BORMAN CIRCLE DRIVE
ST. LOUIS, MO 63146
T (314) 432-8600
F (314) 807-2774
CONTACT: STEVE EHRETT
E-MAIL: STEVE.EHRETT@ALPERAUDI.COM

MECHANICAL, ELECTRICAL, PLUMBING
BRIC PARTNERSHIP, LLC
343 S. KIRKWOOD ROAD, SUITE 204
KIRKWOOD, MO 63122
T (314) 725-5889
CONTACT: BRUCE COLEMAN
E: BCOLEMAN@BRICPARTNERSHIP.COM

ENGINEER OF RECORD:

STEVEN J. EHRETT
MO STRUCTURAL LICENSE E-29025
MO CERTIFICATE OF AUTHORITY 000287

No.	Date	Description
	04/14/17	ISSUED FOR BID

DRAWN BY: **TRN**

PROJECT NUMBER: **16020**

SHEET TITLE:
GENERAL NOTES

S-100

METAL ROOF DECK:

1. METAL ROOF DECK SHALL COMPLY WITH THE REQUIREMENTS OF THE STEEL DECK INSTITUTE PROJECT SPECIFICATIONS SEE PLANS FOR DECK TYPES AND GAUGES.

2. METAL ROOF DECK HAS BEEN DESIGNED TO FUNCTION AS A DIAPHRAGM FOR THE TRANSMISSION OF LATERAL LOADS.

3. LAP DECK 4" MINIMUM AT SPLICES CENTERED ON SUPPORT.

4. DO NOT SUSPEND POINT LOADS FROM DECK INCLUDING HANGERS FOR: CEILINGS, PIPES, DUCTS, EQUIPMENT, ETC... CONTRACTOR INSTALLING SUCH POINT LOADS SHALL PROVIDE SUB-FRAMING TO TRANSFER LOAD TO STRUCTURE SUPPORTING DECK.

5. FABRICATE DECK UNITS IN LENGTHS TO SPAN THREE OR MORE SUPPORT SPACINGS.

6. MINIMUM YIELD STRENGTH = 33 K.S.I.

7. METAL DECK SHALL BE ROLLED OF STEEL SHEETS CONFORMING TO A.S.T.M. A1008 GRADE A. NO METAL ROOF DECK SHALL HAVE SECTION PROPERTIES PER FOOT OF WIDTH NOT LESS THAN THAT PROVIDED BY VULCRAFT FOR THE TYPE OF DECK INDICATED.

8. DECKING MANUFACTURER SHALL COORDINATE SIZE AND LOCATION OF ROOF OPENINGS WITH ARCHITECTURAL AND MECHANICAL DRAWINGS. PROVIDE FRAMING FOR OPENINGS PER TYPICAL DETAILS.

STEEL JOISTS:

1. STEEL JOISTS SHALL BE DETAILED, FABRICATED AND ERECTED IN ACCORDANCE WITH "S.J.I." SPECIFICATIONS (LATEST EDITION).

2. BRIDGING SHALL BE SPACED IN ACCORDANCE WITH S.J.I. SPECIFICATIONS AND THE ERECTION DRAWINGS OF THE JOIST SUPPLIER. STEEL JOIST BRIDGING SHALL BE PLACED AND JOIST ENDS FIXED PRIOR TO THE APPLICATION OF ANY LOADS. JOIST SUPPLIER SHALL PROVIDE ALL BRIDGING NECESSARY TO ADEQUATELY BRACE THE JOIST TOP CHORD WHERE ROOF CONSTRUCTION IS INSUFFICIENT.

3. MINIMUM BEARING REQUIREMENTS, UNLESS NOTED OTHERWISE:

K SERIES: 2 1/2" ON STRUCTURAL STEEL
LH & DLH SERIES: 4" ON STRUCTURAL STEEL

4. UNLESS NOTED OTHERWISE, JOISTS SHALL BE ATTACHED TO SUPPORTING STEEL WORK AS FOLLOWS:

K SERIES: TWO 1/8" FILLET WELDS (ONE EACH SIDE) 2" LONG OR EQUIVALENT.
LH & DLH SERIES: TWO 1/4" FILLET WELDS (ONE EACH SIDE) 2" LONG OR EQUIVALENT.

5. JOISTS, AT COLUMN CENTERLINES, SHALL BE BOLTED TO STRUCTURAL STEEL BEAMS PER S.J.I. REQUIREMENTS.

6. SEE DETAILS FOR ATTACHMENT OF JOISTS TO CONCRETE AND MASONRY.

7. BRIDGING THAT TERMINATES AT, OR IS INTERRUPTED BY, STRUCTURAL STEEL BEAMS, SHALL BE ATTACHED THERETO BY FIELD WELDING OR BOLTING. SEE DRAWINGS FOR DETAIL OF ATTACHMENT OF BRIDGING TO CONCRETE OR MASONRY.

8. JOISTS SHALL BE STOCKPILED AT THE JOBSITE IN A VERTICAL POSITION, RESTING ON THEIR TOP OR BOTTOM CHORDS, AND SHALL BE ADEQUATELY SUPPORTED WITH WOOD BLOCKING. KEEP JOISTS FREE OF MUD AND DIRT.

9. IT SHALL BE THE ERECTOR'S RESPONSIBILITY TO SEE THAT JOISTS WHICH ARE DAMAGED, KINKED, BENT, OR WITH BROKEN WELDS, ARE NOT PLACED IN THE STRUCTURE.

10. JOIST SUPPLIER SHALL DESIGN JOISTS AND SUBMIT CALCULATIONS, STAMPED AND SIGNED BY A PROFESSIONAL ENGINEER IN THE STATE OF THE PROJECT FOR RECORD COPY TO BUILDING DEPARTMENT AND ENGINEER OF RECORD PRIOR TO FABRICATION OF JOISTS. THE ABOVE CALCULATIONS TO INCLUDE ALL LOADING CONDITIONS SHOWN ON THE DRAWINGS AND DETAILS.

11. JOIST ENDS, AT ROOF DIAPHRAGM BOUNDARIES, SHALL BE CAPABLE OF TRANSMITTING THE BOUNDARY SHEAR TO THE SUPPORTING STRUCTURE. SEE DETAILS.

12. THE JOIST DESIGN AND BRIDGING PLACEMENT SHALL BE CHECKED BY THE JOIST MANUFACTURER USING THE NET UPLIFT SPECIFIED ON THE DRAWINGS. CHANGES IN JOIST SIZE AND/OR BRIDGING PLACEMENT WILL SHOW UP ON THE SHOP DRAWINGS.

13. LOCATE PIPE AND EQUIPMENT HANGERS AND OTHER CONCENTRATED LOADS ONLY WHERE LOADS ARE SHOWN ON JOIST SHOP DRAWINGS. ATTACHMENT METHOD AS APPROVED BY JOIST MANUFACTURER.

14. ALL HOLES IN SUPPORTING STEEL PROVIDED FOR JOIST ERECTION SHALL BE "FILLED" WITH APPROPRIATE DIAMETER BOLT OR PLUG WELDED. HOLES IN SUPPORTING STEEL SHALL NOT BE SLOTTED.

POST-INSTALLED MECHANICAL ANCHORS:

1. POST-INSTALLED MECHANICAL ANCHORS SHALL ONLY BE USED WHERE SPECIFIED ON THE DRAWINGS. THE CONTRACTOR SHALL OBTAIN APPROVAL FROM THE ENGINEER OF RECORD PRIOR TO USING POST-INSTALLED ANCHORS FOR MISSING OR MISPLACED CAST-IN ANCHORS. CARE SHALL BE GIVEN TO AVOID CONFLICTS WITH EXISTING REBAR. HOLES SHALL BE DRILLED AND CLEANED PER THE MANUFACTURER'S INSTRUCTIONS. DO NOT CUT EXISTING REINFORCING.

2. THE CONTRACTOR SHALL ARRANGE AN ANCHOR MANUFACTURER'S REPRESENTATIVE TO PROVIDE ONSITE INSTALLATION TRAINING FOR ALL OF THEIR ANCHORING PRODUCTS SPECIFIED. THE STRUCTURAL ENGINEER OR RECORD MUST RECEIVE DOCUMENTED CONFIRMATION THAT ALL OF THE CONTRACTOR'S PERSONNEL WHO INSTALL ANCHORS ARE TRAINED PRIOR TO THE COMMENCEMENT OF INSTALLING ANCHORS.

3. UNLESS SPECIFIED OTHERWISE, ANCHORS SHALL BE EMBEDDED IN THE APPROPRIATE SUBSTRATE WITH A MINIMUM EMBEDMENT OF 8 TIMES THE NOMINAL ANCHOR DIAMETER OR THE EMBEDMENT DEPTH REQUIRED TO SUPPORT THE INTENDED LOAD. SUBSTITUTION REQUESTS, FOR PRODUCTS OTHER THAN THOSE LISTED BELOW, SHALL BE SUBMITTED TO THE ENGINEER WITH CALCULATIONS THAT ARE PREPARED AND SEALED BY A PROFESSIONAL ENGINEER, REGISTERED IN THE STATE WHERE PROJECT IS LOCATED, SHOWING THAT THE SUBSTITUTED PRODUCTS WILL ACHIEVE AN EQUIVALENT CAPACITY.

4. UNLESS OTHERWISE NOTED IN THE DETAILS, ANCHORS SHALL BE:

A. CONCRETE EXPANSION ANCHORS:

ALL CONCRETE EXPANSION ANCHORS SHALL MEET THE REQUIREMENTS OF A.C.I. 318, APPENDIX D AND SHALL BE ACCEPTABLE FOR BOTH CRACKED AND UN-CRACKED CONCRETE.

"STRONG-BOLT" BY SIMPSON STRONG-TIE CO. (ICC-ES ESR-1771)
"KWIK BOLT TZ" BY HILTI, INC. (ICC-ES ESR-1917)
"HSL HEAVY DUTY SLEEVE ANCHOR" BY HILTI, INC. (ICC-ES ESR-1545)
"HDA UNDERCUT ANCHOR" BY HILTI, INC. (ICC-ES ESR-1546)
"KWIK BOLT 3" BY HILTI, INC. UNCRACKED ONLY (ICC-ES ESR-2302)

B. GROUTED MASONRY EXPANSION ANCHORS:

"WEDGE-ALL" BY SIMPSON STRONG-TIE CO. (ICC-ES ESR-1396)
"KWIK BOLT 3" BY HILTI, INC. (ICC-ES ESR-1385)
ADHERE TO MANUFACTURES REQUIREMENTS FOR ANCHOR SPACING AND LOCATIONS.

C. CONCRETE SCREW ANCHORS:

ALL SCREW ANCHORS SHALL BE INSTALLED IN DRY, INTERIOR NON-CORROSIVE ENVIRONMENTS OR FOR TEMPORARY OUTDOOR APPLICATIONS.

"TITEN HD" BY SIMPSON STRONG-TIE CO. (ICC-ES ESR-2713) CRACKED AND UN-CRACKED CONCRETE.
"KWIK HUS EZ AND EZ-1" BY HILTI, INC. (ICC-ES ESR-3027)

D. MASONRY SCREW ANCHORS:

ALL SCREW ANCHORS SHALL BE INSTALLED IN DRY, INTERIOR NON-CORROSIVE ENVIRONMENTS OR FOR TEMPORARY OUTDOOR APPLICATIONS.

"TITEN HD" BY SIMPSON STRONG-TIE CO. (ICC-ES ESR-2713)
"HUS-H SCREW ANCHOR" BY HILTI, INC. (ICC-ES ESR-2369)

E. SPECIAL INSPECTION SHALL BE PROVIDED IN ACCORDANCE WITH THE ICC-ES REPORT AND AS PRESCRIBED BY THE APPLICABLE BUILDING CODE.

POST-INSTALLED ADHESIVE ANCHORS:

1. POST-INSTALLED ADHESIVE ANCHORS SHALL ONLY BE USED WHERE SPECIFIED ON THE DRAWINGS. THE CONTRACTOR SHALL OBTAIN APPROVAL FROM THE ENGINEER OF RECORD PRIOR TO USING POST-INSTALLED ANCHORS FOR MISSING OR MISPLACED CAST-IN ANCHORS. CARE SHALL BE GIVEN TO AVOID CONFLICTS WITH EXISTING REBAR. HOLES SHALL BE DRILLED AND CLEANED PER THE MANUFACTURER'S INSTRUCTIONS. DO NOT CUT EXISTING REINFORCING.

2. THE CONTRACTOR SHALL ARRANGE AN ANCHOR MANUFACTURER'S REPRESENTATIVE TO PROVIDE ONSITE INSTALLATION TRAINING FOR ALL OF THEIR ANCHORING PRODUCTS SPECIFIED. THE STRUCTURAL ENGINEER OF RECORD MUST RECEIVE DOCUMENTED CONFIRMATION THAT ALL OF THE CONTRACTOR'S PERSONNEL WHO INSTALL ANCHORS ARE TRAINED PRIOR TO THE COMMENCEMENT OF INSTALLING ANCHORS.

3. ADHESIVE ANCHOR SYSTEMS IN CONCRETE MUST COMPLY WITH THE LATEST REVISION OF ICC-ES ACCEPTANCE CRITERIA AC308 AND HAVE A VALID ICC-ES REPORT IN ACCORDANCE WITH THE APPLICABLE BUILDING CODE. ACCEPTABLE ADHESIVE ANCHOR SYSTEMS IN CONCRETE ARE LISTED BELOW:

"HIT-HY 200SAFE SET" BY HILTI, INC. (ICC-ES ESR-3187)
"HIT RE 500-SD" BY HILTI, INC. (ICC-ES ESR-2322) CRACKED AND UN-CRACKED CONCRETE
"SET-XP EPOXY" BY SIMPSON STRONG-TIE CO. (ICC-ES ESR-2508) CRACKED AND UN-CRACKED CONCRETE

ADHESIVE ANCHORS SHALL CONSIST OF AN INSERT AND AN ADHESIVE FORMULA. INSERTS SHALL MEET THE REQUIREMENTS OF A.S.T.M. A307, A36, A193-B7, OR F1554 FOR THREADED RODS OR A.S.T.M. A615 OR A706 FOR REBAR UNLESS NOTED OTHERWISE.

ALL ADHESIVE ANCHORS SHALL BE ACCEPTABLE FOR LONG TERM LOADING ONLY. NON-EPOXY BASED ADHESIVES SHALL BE USED WHEN BASE MATERIAL TEMPERATURES ARE BELOW 40 DEG F.

4. ADHESIVE ANCHOR SYSTEMS IN GROUTED MASONRY MUST COMPLY WITH THE LATEST REVISION OF ICC-ES AND HAVE A VALID ICC-ES REPORT IN ACCORDANCE WITH THE APPLICABLE BUILDING CODE. ACCEPTABLE ADHESIVE ANCHOR SYSTEMS ARE LISTED BELOW:

"HIT-HY 70" BY HILTI, INC. (ICC-ES ESR-PENDING)
"SET EPOXY" BY SIMPSON STRONG-TIE CO. (ICC-ES ESR-1772)
ADHERE TO MANUFACTURES REQUIREMENTS FOR ANCHOR SPACING AND LOCATIONS.

5. DRILLING SHALL BE PERFORMED WITH A ROTARY HAMMER DRILL AND CARBIDE TIPPED DRILL BIT IN ACCORDANCE WITH INSTRUCTIONS ACCOMPANYING ADHESIVE CARTRIDGES AND APPLICABLE ICC-ESR.

6. BORE HOLE CLEANING PROCEDURES MUST COMPLY WITH INSTRUCTIONS ACCOMPANYING THE ADHESIVE CARTRIDGE AND APPLICABLE ICC-ESR IN ORDER TO PRODUCE A DRY, DUST-FREE HOLE.

7. INJECTION OF ADHESIVE SHALL BE PREFORMED IN ACCORDANCE WITH MANUFACTURER'S INSTRUCTIONS ACCOMPANYING PRODUCT AND APPLICABLE ICC-ESR TO PRODUCE AN AIR-VOID FREE INJECTION.

8. ALTERNATE DRILLING METHODS, SUCH AS DIAMOND CORING, MUST BE APPROVED BY THE ENGINEER OF RECORD AND COMPLY WITH THE APPLICABLE ICC-ES REPORT.

9. SPECIAL CONDITIONS SUCH AS WATER SATURATED CONCRETE, WATER-FILLED HOLES, UNDERWATER AND OVERHEAD INSTALLATIONS MUST BE APPROVED BY THE ENGINEER OF RECORD AND COMPLY WITH THE APPLICABLE ICC-ES REPORT.

10. SPECIAL INSPECTION SHALL BE PROVIDED IN ACCORDANCE WITH THE ICC-ES REPORT AND AS PRESCRIBED BY THE APPLICABLE BUILDING CODE.

11. FASTENING ELEMENTS (THREADED RODS, REBAR AND INTERNALLY THREADED INSERTS) MUST BE CLEAN, DRY AND FREE OF ANY OIL OR CONTAMINANTS.

12. OVERHEAD ADHESIVE ANCHORS MUST BE INSTALLED USING HILTI PROFI SYSTEM.

DEFERRED SUBMITTALS:

1. THE FOLLOWING PROJECT COMPONENTS REQUIRE DESIGN TO BE PROVIDED BY A QUALIFIED PROFESSIONAL ENGINEER, LICENSED IN THE STATE OF THE PROJECT:

A. CONNECTION DESIGN FOR BRACED FRAMES, MOMENT FRAMES, COLLECTOR BEAMS AND TYPICAL SHEAR CONNECTIONS.

B. STRUCTURAL LIGHT GAUGE STEEL FRAMING CALCULATIONS AND DETAILS.

MISCELLANEOUS:

1. STRUCTURAL DRAWINGS ARE INTENDED TO BE USED WITH ARCHITECTURAL AND MECHANICAL DRAWINGS. CONTRACTOR IS RESPONSIBLE FOR COORDINATING SUCH REQUIREMENTS INTO THEIR SHOP DRAWINGS AND WORK.

2. NO OPENING SHALL BE MADE IN ANY STRUCTURAL MEMBER WITHOUT THE WRITTEN APPROVAL OF THE ARCHITECT.

3. NO CHANGE IN SIZE OR DIMENSION OF STRUCTURAL MEMBERS SHALL BE MADE WITHOUT THE WRITTEN APPROVAL OF THE ARCHITECT.

4. OPENINGS 1'-4" AND LESS ON A SIDE ARE GENERALLY NOT SHOWN ON THE STRUCTURAL DRAWINGS. REFER TO ARCHITECTURAL AND MECHANICAL DRAWINGS FOR SUCH OPENINGS.

5. THE CONTRACTOR IS RESPONSIBLE FOR LIMITING THE AMOUNT OF CONSTRUCTION LOAD IMPOSED UPON STRUCTURAL FRAMING. CONSTRUCTION LOADS SHALL NOT EXCEED THE DESIGN CAPACITY OF THE FRAMING AT THE TIME THE LOADS ARE IMPOSED.

6. THE STRUCTURE IS DESIGNED TO FUNCTION AS A UNIT UPON COMPLETION. THE CONTRACTOR IS RESPONSIBLE FOR FURNISHING ALL TEMPORARY BRACING AND/OR SUPPORT THAT MAY BE REQUIRED AS THE RESULT OF THE CONTRACTOR'S CONSTRUCTION METHODS AND/OR SEQUENCES.

7. UNLESS OTHERWISE NOTED, FIRE PROOFING METHODS AND MATERIALS FOR STRUCTURAL MEMBERS ARE NOT SHOWN ON STRUCTURAL DRAWINGS. REFER TO ARCHITECTURAL DRAWINGS AND SPECIFICATIONS FOR FIRE RATING REQUIREMENTS, FIRE PROOFING METHODS AND MATERIALS.

8. DO NOT SCALE THESE DRAWINGS, USE DIMENSIONS.

9. CONTRACTOR'S CONSTRUCTION AND/OR ERECTION SEQUENCES SHALL RECOGNIZE AND CONSIDER THE EFFECTS OF THERMAL MOVEMENTS OF STRUCTURAL ELEMENTS DURING THE CONSTRUCTION PERIOD. EXPANSION JOINTS SHOWN ON THE DRAWINGS HAVE BEEN DESIGNED TO ACCOMMODATE ANTICIPATED THERMAL MOVEMENT AFTER THE BUILDING IS COMPLETE.

10. THE CONTRACTOR SHALL INFORM THE ARCHITECT IN WRITING OF ANY DEVIATION FROM THE CONTRACT DOCUMENTS. THE CONTRACTOR SHALL NOT BE RELIEVED OF THE RESPONSIBILITY FOR SUCH DEVIATION BY THE ARCHITECT'S APPROVAL OF SHOP DRAWINGS, PRODUCT DATA, ETC., UNLESS HE HAS SPECIFICALLY INFORMED THE ARCHITECT OF SUCH DEVIATION AT THE TIME OF SUBMISSION, AND THE ARCHITECT HAS GIVEN WRITTEN APPROVAL TO THE SPECIFIC DEVIATION.

11. ALL THINGS WHICH, IN THE OPINION OF THE CONTRACTOR, APPEAR TO BE DEFICIENCIES, OMISSIONS, CONTRADICTIONS, OR AMBIGUITIES, IN THE PLANS AND SPECIFICATIONS SHALL BE BROUGHT TO THE ATTENTION OF THE ARCHITECT. PLANS AND/OR SPECIFICATIONS WILL BE CORRECTED, OR WRITTEN INTERPRETATION OF THE ALLEGED DEFICIENCY, OMISSION, CONTRADICTION OR AMBIGUITY WILL BE MADE BY THE ARCHITECT BEFORE THE AFFECTED WORK PROCEEDS.

12. CHECK ALL DIMENSIONS AGAINST REQUIREMENTS OF OTHER CONTRACT DOCUMENTS. FIELD VERIFY DIMENSIONS RELATING TO EXISTING CONDITIONS PRIOR TO ORDERING MATERIALS AND FABRICATION.

13. WHERE DIMENSIONS OR WEIGHTS OF EQUIPMENT OR SYSTEMS ARE VARIABLE FROM MANUFACTURER TO MANUFACTURER, VERIFY DIMENSIONS AND WEIGHTS SHOWN ON DRAWINGS WITH SELECTED MANUFACTURER PRIOR TO ORDERING MATERIALS. NOTIFY STRUCTURAL ENGINEER OF DISCREPANCIES.

14. DO NOT PLACE EQUIPMENT WHEN SHIPPING OR OPERATING WEIGHT EXCEEDS WEIGHT INDICATED ON STRUCTURAL DRAWINGS.

15. NO MODIFICATION, ALTERATION OR REPAIR SHALL BE MADE WITHOUT PRIOR REVIEW BY STRUCTURAL ENGINEER. SUBMIT DETAILS AND CALCULATIONS PREPARED BY A PROFESSIONAL ENGINEER REGISTERED IN STATE WHERE PROJECT IS LOCATED AND EMPLOYED BY CONTRACTORS.

16. VERIFY ELEVATOR AND ESCALATOR PIT DIMENSIONS, LOCATIONS, LOADINGS AND DETAILS WITH SUPPLIERS PRIOR TO THE FABRICATION AND/OR INSTALLATION OF ANY MATERIAL.

SPECIAL INSPECTION:

THE FOLLOWING STRUCTURAL ELEMENTS OF CONSTRUCTION SHALL REQUIRE SPECIAL INSPECTION PER I.B.C. SECTION 1704. CONTRACTOR TO FURNISH INSPECTION UNLESS INSTRUCTED OTHERWISE BY THE CONSTRUCTION CONTRACT.

TYPE OF CONSTRUCTION	IBC SECTION	IBC TABLE
INSPECTION OF FABRICATOR	1704.2	-
STEEL CONSTRUCTION	1704.3	1704.3
CONCRETE	1704.4	1704.4
SOILS	1704.7	1704.4
ADHESIVE ANCHORS SHALL BE INSPECTED PER THE REQUIREMENTS IN THEIR ICC-ES REPORTS		
MECHANICAL ANCHORS SHALL BE INSPECTED PER THE REQUIREMENTS IN THEIR ICC-ES REPORTS		

NOTES:

1. SPECIAL INSPECTION IS NOT A SUBSTITUTE FOR INSPECTION BY A CITY INSPECTOR. SPECIALLY INSPECTED WORK WHICH IS INSTALLED OR COVERED WITHOUT THE APPROVAL OF THE CITY INSPECTOR IS SUBJECT TO REMOVAL OR EXPOSURE.

2. THE SPECIAL INSPECTORS MUST BE CERTIFIED BY THE CITY TO PERFORM THE TYPES OF INSPECTION SPECIFIED.

3. IT IS THE RESPONSIBILITY OF THE CONTRACTOR TO INFORM THE SPECIAL INSPECTOR OR INSPECTION AGENCY AT LEAST ONE WORKING DAY PRIOR TO PERFORMING ANY WORK THAT REQUIRES SPECIAL INSPECTION. ANY WORK PERFORMED WITHOUT REQUIRED SPECIAL INSPECTION IS SUBJECT TO REMOVAL.

4. SUBMIT WRITTEN REPORTS WITHIN TWO DAYS OF TESTING TO ENGINEER OF RECORD.

Scenic Regional Library
read, explore, grow

SCENIC REGIONAL LIBRARY
WRIGHT CITY BRANCH
60 WILDCAT DRIVE
WRIGHT CITY, MO 63390

JEMA
SDA ARCHITECTS

ARCHITECT-OF-RECORD
JEMA
3005 LOCUST ST.
ST. LOUIS, MO 63103
T (314) 531-7400
CONTACT: SCOTT CLARK
E-MAIL: SCLARK@JEMASTL.COM

DESIGN ARCHITECT
SAPP DESIGN ASSOCIATES ARCHITECTS
3750 SOUTH FREMONT
SPRINGFIELD, MO 65804
T (417) 877-9600
F (417) 877-9696
CONTACT: JAMES STUFFLEBEAM
E: STUFFLEBEAM@SDAARCHITECTS.COM

CIVIL
COCHRAN
530A E. INDEPENDENCE DRIVE
UNION, MO 63084
CONTACT: DAVE VAN LEER
T (636) 584-0540
F (636) 584-0512
E-MAIL: DVANLEER@COCHRAN.COM

STRUCTURAL
ALPER AUDI, INC.
1804 BORMAN CIRCLE DRIVE
ST. LOUIS, MO 63146
T (314) 432-8600
F (314) 807-2774
CONTACT: STEVE EHRETT
E-MAIL: STEVE.EHRETT@ALPERAUDI.COM

MECHANICAL, ELECTRICAL, PLUMBING
BRIC PARTNERSHIP, LLC
343 S. KIRKWOOD ROAD, SUITE 204
KIRKWOOD, MO 63122
T (314) 725-5889
CONTACT: BRUCE COLEMAN
E: BCOLEMAN@BRICPARTNERSHIP.COM

ENGINEER OF RECORD:

STEVEN J. EHRETT
MO STRUCTURAL LICENSE E-29025
MO CERTIFICATE OF AUTHORITY 000287

No.	Date	Description
	04/14/17	ISSUED FOR BID

DRAWN BY: TRN

PROJECT NUMBER: 16020

SHEET TITLE:
GENERAL NOTES

S-101

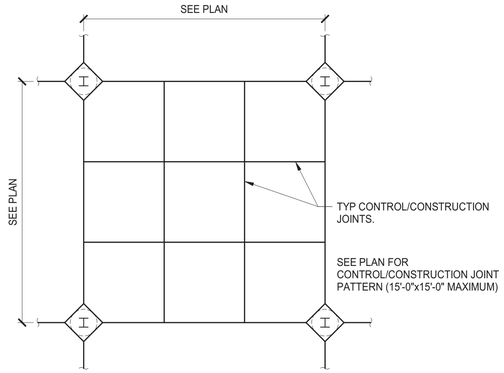

1 S-102 TYPICAL SLAB CONTROL AND CONSTRUCTION JOINT DETAIL

N.T.S.

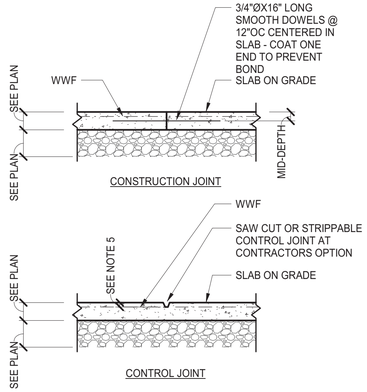

NOTES:

1. CONSTRUCTION AND/OR CONTROL JOINTS ARE INTERCHANGEABLE AT THE CONTRACTORS OPTION. SEE PLANS FOR JOINT LOCATIONS.

2. SAW CUTTING OF JOINTS SHALL BE DONE AS THE CONCRETE SETS SUFFICIENTLY TO PERMIT CUTTING WITHOUT CHIPPING, SPALLING OR TEARING, BUT NOT MORE THAN 24 HOURS AFTER PLACING.

3. REINFORCEMENT TO STOP 2" CLEAR OF CONSTRUCTION JOINTS OR STRIPPABLE CONTROL JOINTS. AT SAW CUT JOINTS, CUT REINFORCEMENT OR STOP 2" CLEAR OF JOINT.

4. JOINTS SHALL DIVIDE SLAB INTO AREAS AS SQUARE AS POSSIBLE (1.5 TO 1 MAXIMUM L x W RATIO) WITH A MAXIMUM JOINT SPACING OF 15'-0", UNLESS NOTED OTHERWISE.

5. 1 1/2" IF "D" IS LESS THAN OR EQUAL TO 9", D/3 IF "D" IS GREATER THAN 9", D/3 IF REINFORCED.

6. IF SLAB AREA IS UNDEFINED ON PLAN OR IF AN ALTERNATE JOINT PATTERN IS REQUESTED, THE CONTRACTOR SHALL SUBMIT A LOCATION PLAN FOR APPROVAL.

2 S-102 TYPICAL SLAB ON GRADE DETAIL

N.T.S.

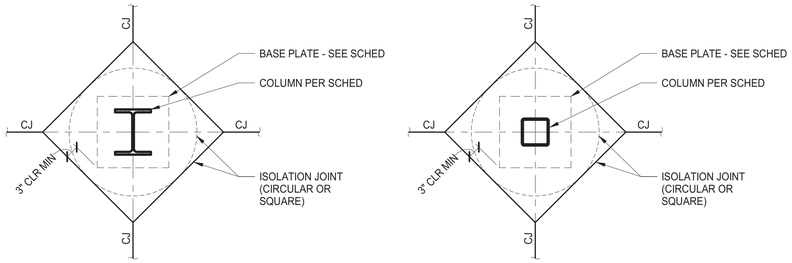

3 S-102 TYPICAL COLUMN ISOLATION JOINT DETAIL

N.T.S.

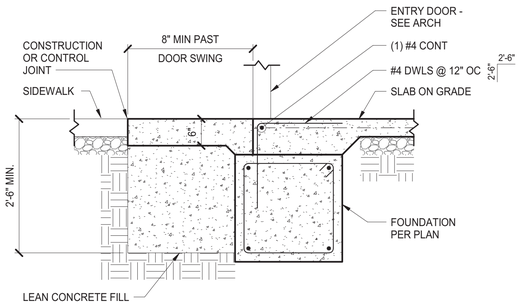

4 S-102 TYPICAL ENTRY FOR SLAB FROST HEAVE PREVENTION DETAIL

N.T.S.

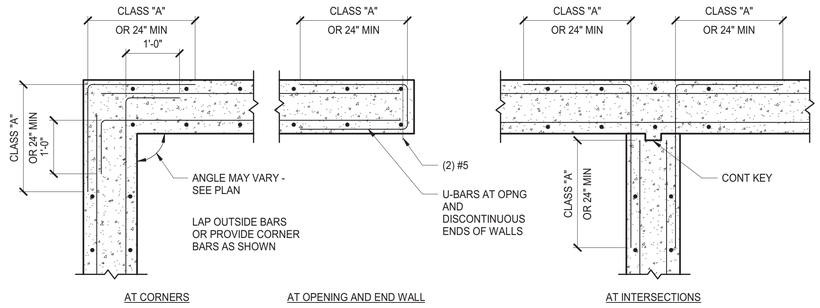

5 S-102 TYPICAL REINFORCEMENT AT INTERSECTIONS AND CORNERS OF CONTINUOUS FOOTINGS, GRADE BEAMS, AND WALLS DETAIL

N.T.S.

BEAM CONNECTION SCHEDULE

BEAM SIZE	MINIMUM NUMBER OF ROWS OF 3/4"Ø A-325N BOLTS (UNO)
W8 AND W10	2
W12 AND W14	3
W16	4
W18	5
W21	6
W24	7
W30	8
W33	9

NOTES:

1. TABLE INDICATES MINIMUM VALUES. CONNECTION ENGINEER TO PROVIDE CALCULATIONS FOR ALL SHEAR CONNECTIONS.

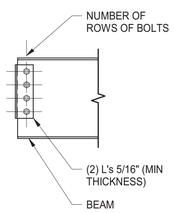

6 S-102 TYPICAL BOLTS PER CONNECTION DETAIL

3/4" = 1'-0"

BEAM CONNECTION SCHEDULE

BEAM SIZE	MINIMUM NUMBER OF ROWS OF 3/4"Ø A-325N BOLTS (UNO)	WELD SIZE (IN) MINIMUM	PLATE THICKNESS (T) (IN) MINIMUM
W8 AND W10	2	1/4	5/16
W12 AND W14	3	1/4	5/16
W16	4	1/4	5/16
W18	5	5/16	3/8
W21	6	5/16	3/8
W24 AND W27	7	3/8	7/16
W30	8	3/8	7/16
W33 AND W36	9	3/8	7/16

NOTES:

1. TABLE INDICATES MINIMUM VALUES. CONNECTION ENGINEER TO PROVIDE CALCULATIONS FOR ALL SHEAR CONNECTIONS.

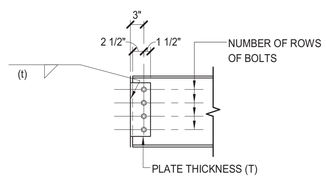

7 S-102 TYPICAL SINGLE SHEAR TAB CONNECTION DETAIL

3/4" = 1'-0"

Scenic Regional Library
read, explore, grow

SCENIC REGIONAL LIBRARY
WRIGHT CITY BRANCH
60 WILDCAT DRIVE
WRIGHT CITY, MO 63390

JEMA learning architecture interior design
SDA ARCHITECTS

ARCHITECT-OF-RECORD
JEMA
3005 LOCUST ST.
ST. LOUIS, MO 63103
T (314) 531-7400
CONTACT: SCOTT CLARK
E-MAIL: SCLARK@JEMASTL.COM

DESIGN ARCHITECT
SAPP DESIGN ASSOCIATES ARCHITECTS
3750 SOUTH FREMONT
SPRINGFIELD, MO 65804
T (417) 877-9600
F (417) 877-9696
CONTACT: JAMES STUFFLEBEAM
E: STUFFLEBEAM@SDAARCHITECTS.COM

CIVIL
COCHRAN
530A E. INDEPENDENCE DRIVE
UNION, MO 63084
CONTACT: DAVE VAN LEER
T (636) 584-0540
F (636) 584-0512
E-MAIL: DVANLEER@COCHRAN.COM

STRUCTURAL
ALPER AUDI, INC.
1804 BORMAN CIRCLE DRIVE
ST. LOUIS, MO 63146
T (314) 432-8600
F (314) 807-2774
CONTACT: STEVE EHRETT
E-MAIL: STEVE.EHRETT@ALPERAUDI.COM

MECHANICAL, ELECTRICAL, PLUMBING
BRIC PARTNERSHIP, LLC
343 S. KIRKWOOD ROAD, SUITE 204
KIRKWOOD, MO 63122
T (314) 725-5889
CONTACT: BRUCE COLEMAN
E: BCOLEMAN@BRICPARTNERSHIP.COM

ENGINEER OF RECORD:

STEVEN J. EHRETT
MO STRUCTURAL LICENSE E-29025
MO CERTIFICATE OF AUTHORITY 000287

No.	Date	Description
	04/14/17	ISSUED FOR BID

DRAWN BY: **TRN**

PROJECT NUMBER: **16020**

SHEET TITLE:
TYPICAL DETAILS

S-102

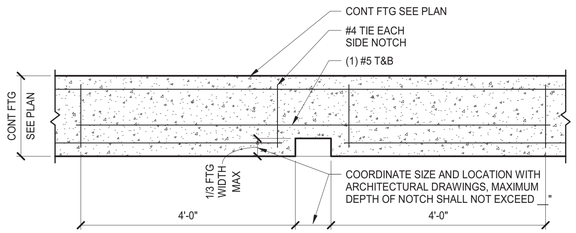

1 S-103 TYPICAL DOWN SPOUT NOTCH AT CONTINUOUS FOOTING DETAIL
N.T.S.

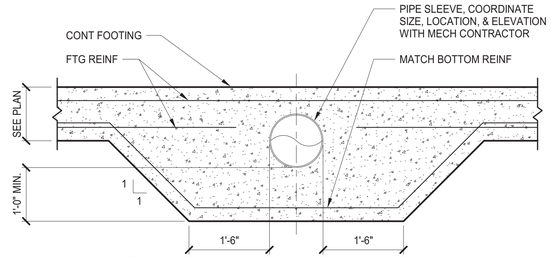

(PENETRATIONS REQUIRED IN GRADE BEAMS SHALL BE LIMITED TO THE MIDDLE THIRD OF THE GRADE BEAM DEPTH AND THE MIDDLE THIRD OF THE SPAN. MULTIPLE PENETRATIONS SHALL BE SPACED A MINIMUM OF 6" BETWEEN EDGES OF SLEEVES WITH A CONC REINFORCING TIE SPACED BETWEEN. PROPOSED PENETRATION LOCATIONS SHALL BE SUBMITTED FOR REVIEW)

2 S-103 TYPICAL PIPE SLEEVE THRU CONTINUOUS FOOTING DETAIL
N.T.S.

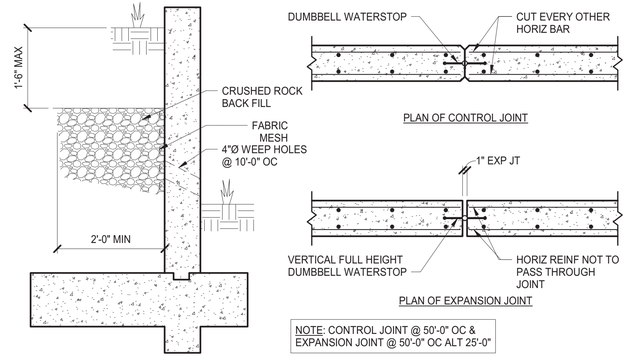

NOTE: CONTROL JOINT @ 50'-0" OC & EXPANSION JOINT @ 50'-0" OC ALT 25'-0"

3 S-103 TYPICAL RETAINING WALL DETAILS
N.T.S.

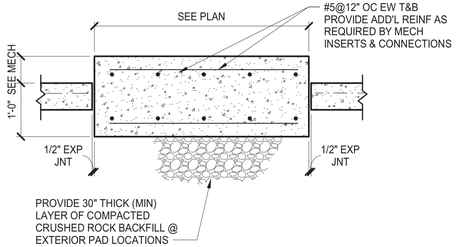

4 S-103 TYPICAL MECHANICAL PAD ON GRADE DETAIL
N.T.S.

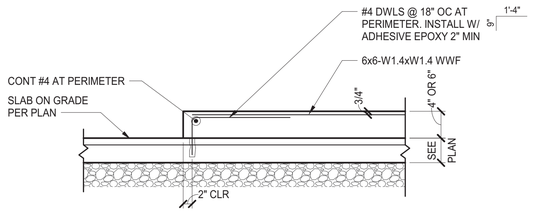

5 S-103 TYPICAL HOUSEKEEPING PAD ON CONCRETE SLAB ON GRADE
N.T.S.

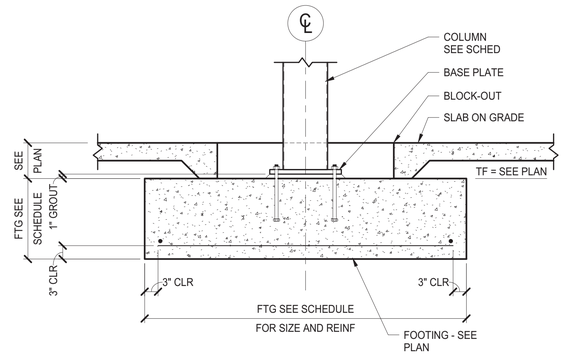

6 S-103 TYPICAL INTERIOR COLUMN AT SPREAD FOOTING DETAIL
N.T.S.

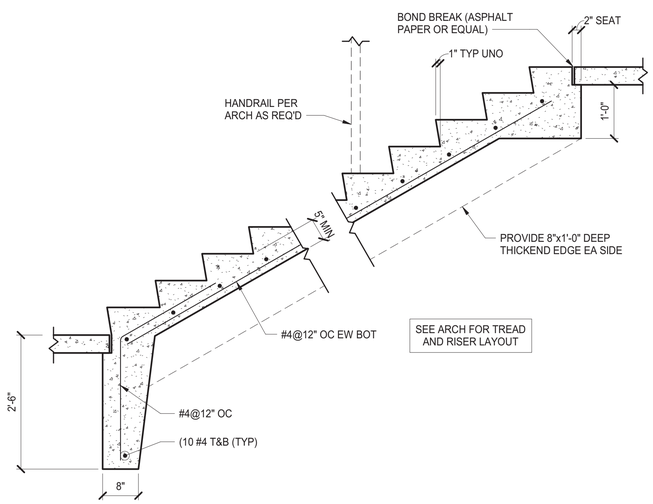

7 S-103 TYPICAL INTERIOR OR EXTERIOR CONCRETE STAIR ON GRADE
N.T.S.

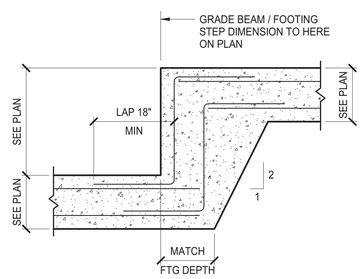

8 S-103 TYPICAL STEP GRADE BEAM OR FOOTING DETAIL
N.T.S.

Scenic Regional Library
read, explore, grow

SCENIC REGIONAL LIBRARY
WRIGHT CITY BRANCH
60 WILDCAT DRIVE
WRIGHT CITY, MO 63390

JEMA learning architecture interior design
SDA ARCHITECTS

ARCHITECT-OF-RECORD
JEMA
3005 LOCUST ST.
ST. LOUIS, MO 63103
T (314) 531-7400
CONTACT: SCOTT CLARK
E-MAIL: SCLARK@JEMASTL.COM

DESIGN ARCHITECT
SAPP DESIGN ASSOCIATES ARCHITECTS
3750 SOUTH FREMONT
SPRINGFIELD, MO 65804
T (417) 877-9600
F (417) 877-9696
CONTACT: JAMES STUFFLEBEAM
E: STUFFLEBEAM@SDAARCHITECTS.COM

CIVIL
COCHRAN
530A E. INDEPENDENCE DRIVE
UNION, MO 63084
CONTACT: DAVE VAN LEER
T (636) 584-0540
F (636) 584-0512
E-MAIL: DVANLEER@COCHRAN.COM

STRUCTURAL
ALPER AUDI, INC.
1804 BORMAN CIRCLE DRIVE
ST. LOUIS, MO 63146
T (314) 432-8600
F (314) 807-2774
CONTACT: STEVE EHRETT
E-MAIL: STEVE.EHRETT@ALPERAUDI.COM

MECHANICAL, ELECTRICAL, PLUMBING
BRIC PARTNERSHIP, LLC
343 S. KIRKWOOD ROAD, SUITE 204
KIRKWOOD, MO 63122
T (314) 725-5889
CONTACT: BRUCE COLEMAN
E: BCOLEMAN@BRICPARTNERSHIP.COM

ENGINEER OF RECORD:

STEVEN J. EHRETT
MO STRUCTURAL LICENSE E-29025
MO CERTIFICATE OF AUTHORITY 000287

No.	Date	Description
	04/14/17	ISSUED FOR BID

DRAWN BY: **TRN**

PROJECT NUMBER: **16020**

SHEET TITLE:
TYPICAL DETAILS

S-103

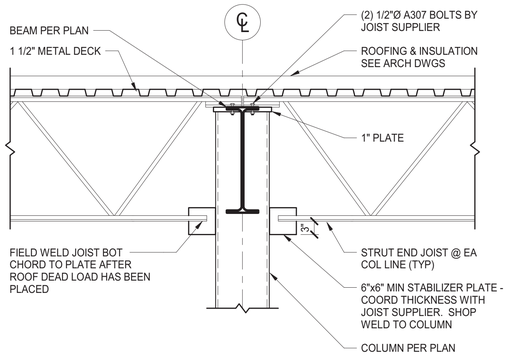

1 S-104 TYPICAL STRUT END JOIST DETAIL AT HSS COLUMN DETAIL
N.T.S.

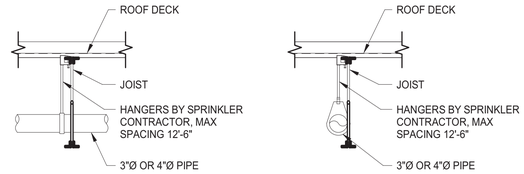

HANGERS SHALL BE ATTACHED AT JOIST PANEL POINTS
OTHERWISE USE JOIST WEB REINFORCEMENT AS SHOWN IN DETAIL

NOTE:
ALL JOIST BRIDGING SHALL BE LOCATED SUCH THAT THE LEADING EDGE OF ANY BRIDGING MEMBER IS A MINIMUM OF 1'-0 (MEASURED HORIZONTALLY) FROM THE CENTER LINE OF ANY SPRINKLER LOCATED ABOVE THE BOTTOM CHORD OF BAR JOISTS. COORDINATE EXACT LOCATIONS OF BRIDGING WITH THE DIMENSIONAL INFORMATION SHOWN ON THE AUTOMATIC SPRINKLER CONSTRUCTION DRAWINGS PREPARED BY _____. NO VARIATION FROM THIS MINIMUM CLEARANCE WILL BE PERMITTED.

2 S-104 TYPICAL 3" DIA OR 4" DIA SPRINKLER PIPES HANGER DETAIL
N.T.S.

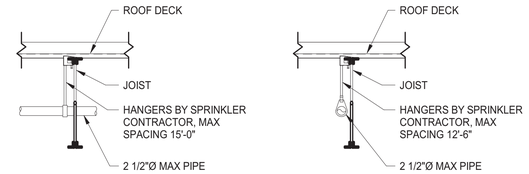

HANGERS DO NOT HAVE TO BE ATTACHED AT JOIST PANEL POINTS
IF ONE HANGER LOAD DOES NOT EXCEED 50LBS - OTHERWISE
USE TYPICAL JOIST WEB REINFORCEMENT AS DETAILED

3 S-104 TYPICAL 2 1/2" DIA MAX SPRINKLER PIPES HANGER DETAIL
N.T.S.

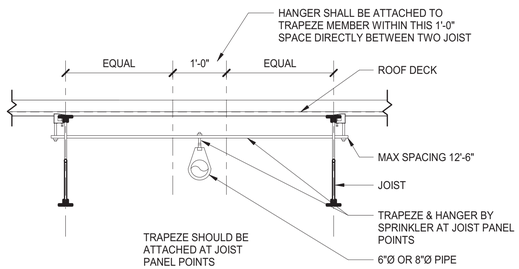

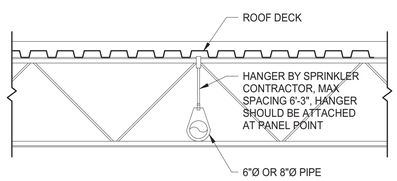

IF HANGER IS NOT ATTACHED AT A PANEL POINT
USE JOIST WEB REINFORCEMENT AS SHOWN IN DETAIL

4 S-104 TYPICAL 6" DIA or 8" DIA SPRINKLER PIPES HANGER DETAIL
N.T.S.

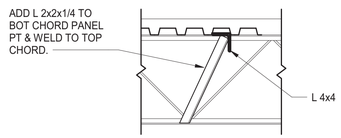

5 S-104 TYPICAL JOIST WEB REINFORCEMENT DETAIL
N.T.S.

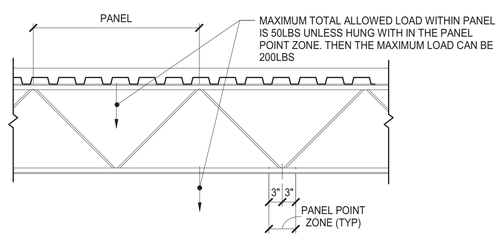

6 S-104 TYPICAL MISCELLANEOUS HANGERS DETAIL
N.T.S.

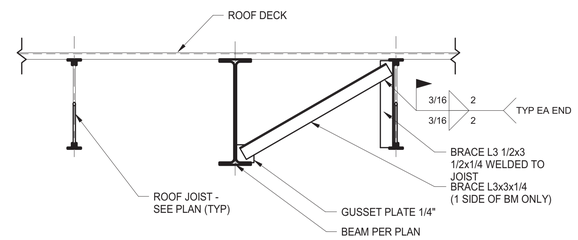

NOTE:
BRACE ANGLES REQUIRED WHERE SHOWN ON THE FRAMING PLANS.
ANGLES ARE TO BE EQUALLY SPACED WITHIN THE BEAM SPAN.

7 S-104 TYPICAL BEAM BOTTOM FLANGE BRACING AT ROOF BEAMS
3/4" = 1'-0"

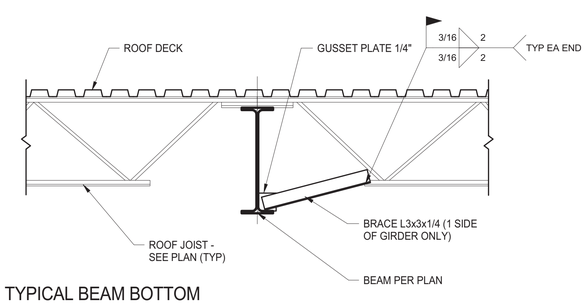

8 S-104 TYPICAL BEAM BOTTOM FLANGE BRACING AT ROOF GIRDERS
3/4" = 1'-0"

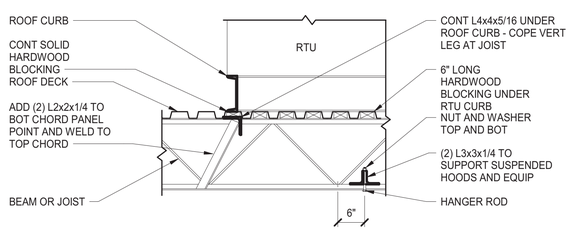

NOTE:
L4x4 CURB SUPPORT DOES NOT FALL AT TOP CHORD PANEL POINT, ADD L2x2 AS SHOWN.

9 S-104 TYPICAL ROOF TOP UNITS DETAIL
3/4" = 1'-0"

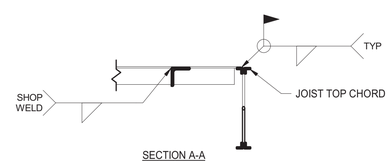

SECTION A-A

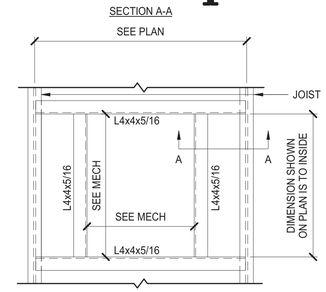

SHOP FABRICATE FRAME

FRAMING FOR OTHER MECHANICAL ROOF OPENINGS, ROOF HATCH, AND SCUTTLES SIMILAR.

10 S-104 TYPICAL RTU ROOF FRAMING DETAIL
3/4" = 1'-0"

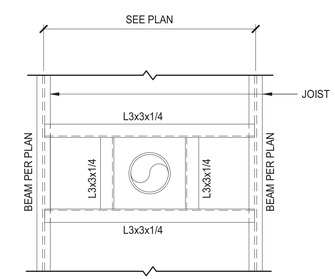

NO ADDITIONAL LOAD TO JOISTS

NOTE:
TWO FRAMES AT EACH LOW POINT

11 S-104 TYPICAL FRAME FOR ROOF DRAIN AND OVERFLOW DETAIL
3/4" = 1'-0" (OTHER OPENINGS SIMILAR)

Scenic Regional Library
read, explore, grow

SCENIC REGIONAL LIBRARY
WRIGHT CITY BRANCH
60 WILDCAT DRIVE
WRIGHT CITY, MO 63390

JEMA learning architecture interior design
SDA ARCHITECTS

ARCHITECT-OF-RECORD
JEMA
3005 LOCUST ST.
ST. LOUIS, MO 63103
T (314) 531-7400
CONTACT: SCOTT CLARK
E-MAIL: SCLARK@JEMASTL.COM

DESIGN ARCHITECT
SAPP DESIGN ASSOCIATES ARCHITECTS
3750 SOUTH FREMONT
SPRINGFIELD, MO 65804
T (417) 877-9600
F (417) 877-9696
CONTACT: JAMES STUFFLEBEAM
E: STUFFLEBEAM@SDAARCHITECTS.COM

CIVIL
COCHRAN
530A E. INDEPENDENCE DRIVE
UNION, MO 63084
CONTACT: DAVE VAN LEER
T (636) 584-0540
F (636) 584-0512
E-MAIL: DVANLEER@COCHRAN.COM

STRUCTURAL
ALPER AUDI, INC.
1804 BORMAN CIRCLE DRIVE
ST. LOUIS, MO 63146
T (314) 432-8600
F (314) 807-2774
CONTACT: STEVE EHRETT
E-MAIL: STEVE.EHRETT@ALPERAUDI.COM

MECHANICAL, ELECTRICAL, PLUMBING
BRIC PARTNERSHIP, LLC
343 S. KIRKWOOD ROAD, SUITE 204
KIRKWOOD, MO 63122
T (314) 725-5889
CONTACT: BRUCE COLEMAN
E: BCOLEMAN@BRICPARTNERSHIP.COM

ENGINEER OF RECORD:
STEVEN J. EHRETT
MO STRUCTURAL LICENSE E-29025
MO CERTIFICATE OF AUTHORITY 000287

No.	Date	Description
	04/14/17	ISSUED FOR BID

DRAWN BY: **TRN**

PROJECT NUMBER: **16020**

SHEET TITLE:
TYPICAL DETAILS

S-104

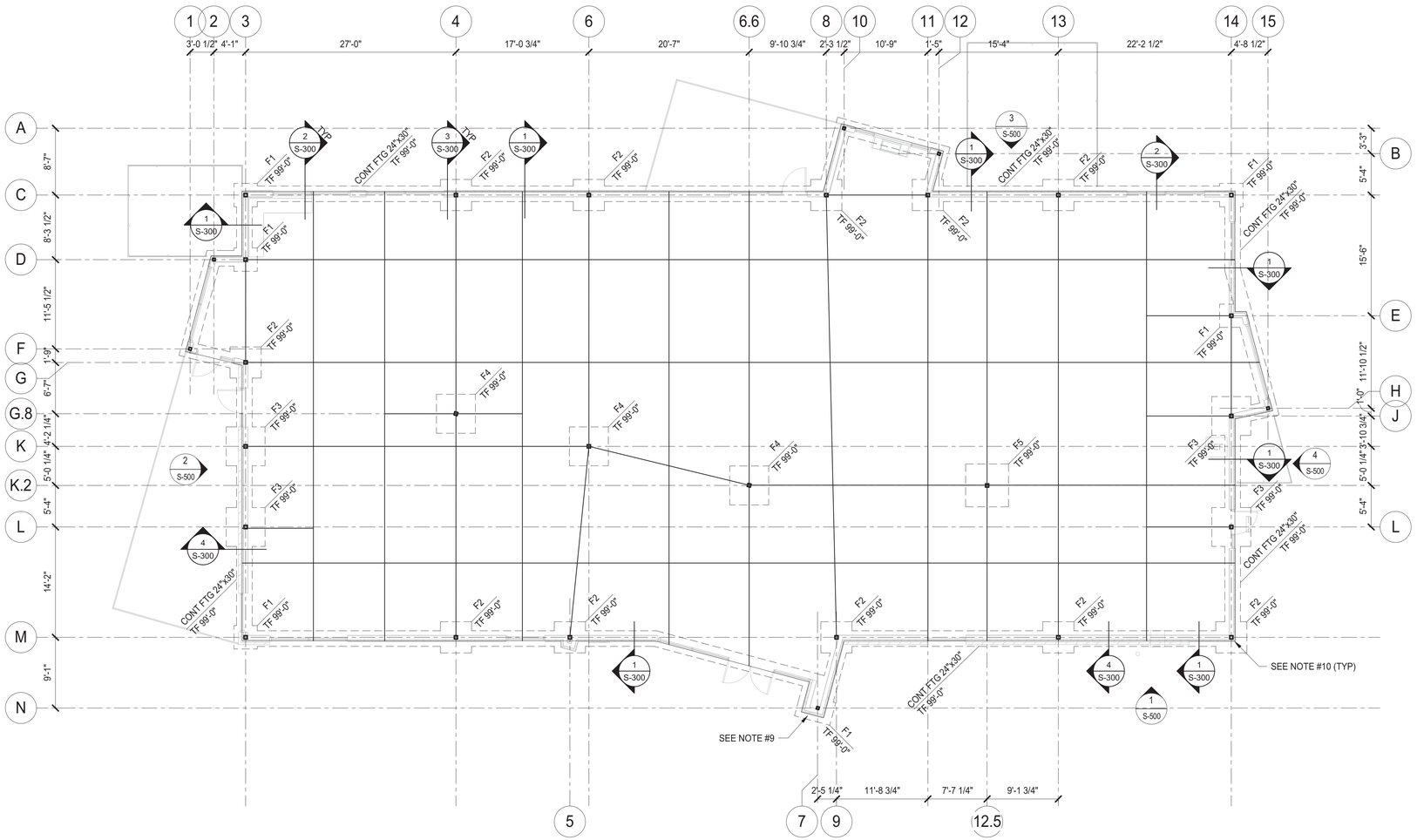

1 S-201 FIRST FLOOR FOUNDATION PLAN
1/8" = 1'-0"

FOUNDATION NOTES:

1. SEE SHEET SERIES S-100 FOR GENERAL NOTES AND TYPICAL DETAILS.
2. SEE SHEET SERIES S-500 FOR VERTICAL BRACING ELEVATIONS AND DETAILS.
3. SEE SHEET SERIES S-600 FOR COLUMN SCHEDULE AND BASE PLATE DETAILS.
4. FINISH FLOOR ELEVATION = 100'-0" (U.S.G.S. DATUM = 750.5').
5. SLAB CONSTRUCTION: 4 NORMAL WEIGHT CONCRETE SLAB ON GRADE ON 6 MIL. VAPOR RETARDER ON 6" MINIMUM COMPACTED GRANULAR FILL. REINFORCE SLAB WITH ONE LAYER 6x6-W2.1xW2.1 WWF CENTERED IN SLAB.
6. "TF" NOTED ON PLAN INDICATES TOP OF FOOTING ELEVATION.
7. "TC" NOTED ON PLAN INDICATES TOP OF CONCRETE ELEVATION.
8. "TW" NOTED ON PLAN INDICATES TOP OF WALL ELEVATION.
9. EXTEND FOOTING AND SLAB FOR WALL FRAMING. REINF EXTENSION W/ #5@12" OC T&B.
10. PROVIDE #4 x 4'-0"x4'-0" CORNER BARS LAPPED W/ CONTINUOUS #4 SLAB BAR @ OUTSIDE CORNER OF COLUMN. PROVIDE ASPHALTIC COATING TO EXPOSED BASE PLATE BELOW GRADE.

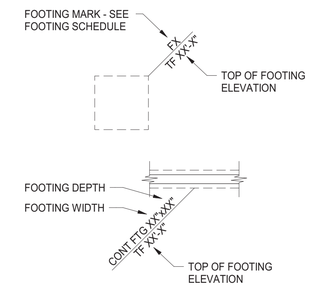

TYPICAL FOOTING DESIGNATION

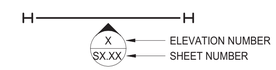

TYPICAL BRACING DESIGNATION

FOOTING SCHEDULE

MARK	SIZE	REINFORCING EACH WAY TOP & BOTTOM UNO	REMARKS
F1	3'-0"x3'-0"x2'-6"	(4) #5 EW	
F2	4'-0"x4'-0"x2'-6"	(5) #5 EW	
F3	5'-0"x5'-0"x2'-6"	(6) #5 EW	
F4	5'-0"x5'-0"x1'-3"	(6) #5 EW	
F5	5'-6"x5'-6"x1'-3"	(6) #5 EW	

Scenic Regional Library
read, explore, grow

SCENIC REGIONAL LIBRARY
WRIGHT CITY BRANCH
60 WILDCAT DRIVE
WRIGHT CITY, MO 63390

JEMA
SDA ARCHITECTS

ARCHITECT-OF-RECORD
JEMA
3005 LOCUST ST.
ST. LOUIS, MO 63103
T (314) 531-7400
CONTACT: SCOTT CLARK
E-MAIL: SCLARK@JEMASTL.COM

DESIGN ARCHITECT
SAPP DESIGN ASSOCIATES ARCHITECTS
3750 SOUTH FREMONT
SPRINGFIELD, MO 65804
T (417) 877-9600
F (417) 877-9696
CONTACT: JAMES STUFFLEBEAM
E: STUFFLEBEAM@SDAARCHITECTS.COM

CIVIL
COCHRAN
530A E. INDEPENDENCE DRIVE
UNION, MO 63084
CONTACT: DAVE VAN LEER
T (636) 584-0540
F (636) 584-0512
E-MAIL: DVANLEER@COCHRAN.COM

STRUCTURAL
ALPER AUDI, INC.
1804 BORMAN CIRCLE DRIVE
ST. LOUIS, MO 63146
T (314) 432-8600
F (314) 807-2774
CONTACT: STEVE EHRETT
E-MAIL: STEVE.EHRETT@ALPERAUDI.COM

MECHANICAL, ELECTRICAL, PLUMBING
BRIC PARTNERSHIP, LLC
343 S. KIRKWOOD ROAD, SUITE 204
KIRKWOOD, MO 63122
T (314) 725-5889
CONTACT: BRUCE COLEMAN
E: BCOLEMAN@BRICPARTNERSHIP.COM

ENGINEER OF RECORD:
STEVEN J. EHRETT
MO STRUCTURAL LICENSE E-29025
MO CERTIFICATE OF AUTHORITY 000287

No.	Date	Description
	04/14/17	ISSUED FOR BID

DRAWN BY: TRN

PROJECT NUMBER: 16020

SHEET TITLE:
FIRST FLOOR FOUNDATION PLAN

S-201

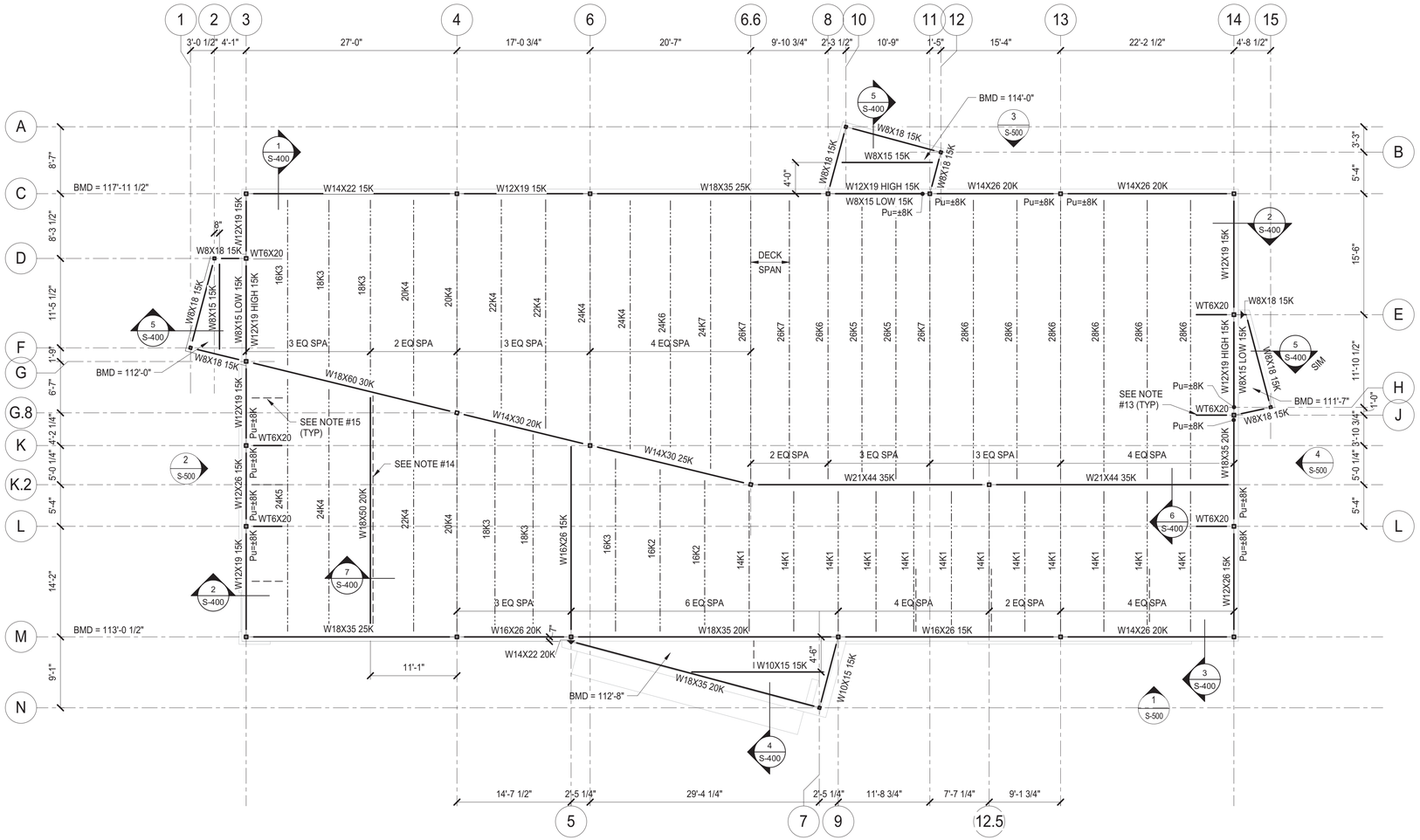

1 S-202 ROOF FRAMING PLAN
1/8" = 1'-0"

FRAMING NOTES:

1. SEE SHEET SERIES S-100 FOR GENERAL NOTES AND TYPICAL DETAILS.
2. SEE SHEET SERIES S-500 FOR VERTICAL BRACING ELEVATIONS AND DETAILS.
3. SEE SHEET SERIES S-600 FOR COLUMN SCHEDULE AND BASE PLATE DETAILS.
4. SEE TYPICAL BEAM DESIGNATION FOR MOMENT CONNECTION SYMBOL.
5. SEE TYPICAL VERTICAL BRACING DESIGNATION FOR BRACING SYMBOL.
6. BOTTOM OF METAL DECK ELEVATION SHOWN ON PLAN.
7. ROOF CONSTRUCTION: 1 1/2" x 20 GAUGE WIDE RIB PAINTED METAL DECK OVER STEEL FRAMING. WELD METAL DECK TO ALL SUPPORTING STEEL WITH 5/8" DIA PUDDLE WELDS IN A 36/7 PATTERN. SIDE LAP OF METAL DECK TO BE ATTACHED WITH (3) #10 SELF-DRILLING SCREWS FOR SPANS MORE THAN 3'-0" LONG. EDGE WELDS OF METAL DECK TO BE @ 6" OC MAXIMUM (UNO)
8. DESIGN ROOF JOISTS FOR A NET UPLIFT OF 18 PSF OVER ENTIRE ROOF AND A NET WIND UPLIFT OF 20 PSF OVER A 7'-0" WIDE STRIP AROUND PERIMETER.
9. BEAM CONNECTIONS SHALL BE DESIGNED TO TRANSFER AXIAL LOADS NOTED "P=__K" ON PLAN.
10. STRUT JOIST TO OCCUR ON ALL COLUMN CENTER LINES UNLESS NOTED OTHERWISE. SEE TYPICAL DETAILS.
11. PROVIDE HORIZONTAL JOIST BRIDGING SPACED PER LATEST S.J.I. (UNO).
12. "BMD" NOTED ON PLAN INDICATES BOTTOM OF METAL DECK ELEVATION.
13. WT6x20 WELD TO COLUMN. COPE AND LAP ONTO JOIST TOP CHORD. WELD DECK
TO WT W/ 5/8"Ø PUDDLE WELDS @ 6" OC
14. MAX FUTURE OPERABLE PARTITION WEIGHT = 150 PLF
15. SEE TYPICAL DETAILS, SHEET S-104, FOR BEAM BRACING DETAILS.

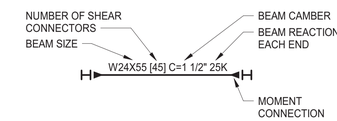

TYPICAL BEAM DESIGNATION

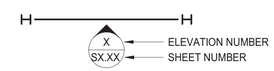

TYPICAL BRACING DESIGNATION

TYPICAL JOIST DESIGNATION

Scenic Regional Library
read, explore, grow

SCENIC REGIONAL LIBRARY
WRIGHT CITY BRANCH
60 WILDCAT DRIVE
WRIGHT CITY, MO 63390

JEMA learning architecture, interior design
SDA ARCHITECTS

ARCHITECT-OF-RECORD
JEMA
3005 LOCUST ST.
ST. LOUIS, MO 63103
T (314) 531-7400
CONTACT: SCOTT CLARK
E-MAIL: SCLARK@JEMASTL.COM

DESIGN ARCHITECT
SAPP DESIGN ASSOCIATES ARCHITECTS
3750 SOUTH FREMONT
SPRINGFIELD, MO 65804
T (417) 877-9600
F (417) 877-9696
CONTACT: JAMES STUFFLEBEAM
E: STUFFLEBEAM@SDAARCHITECTS.COM

CIVIL
COCHRAN
530A E. INDEPENDENCE DRIVE
UNION, MO 63084
CONTACT: DAVE VAN LEER
T (636) 584-0540
F (636) 584-0512
E-MAIL: DVANLEER@COCHRAN.COM

STRUCTURAL
ALPER AUDI, INC.
1804 BORMAN CIRCLE DRIVE
ST. LOUIS, MO 63146
T (314) 432-8600
F (314) 807-2774
CONTACT: STEVE EHRETT
E-MAIL: STEVE.EHRETT@ALPERAUDI.COM

MECHANICAL, ELECTRICAL, PLUMBING
BRIC PARTNERSHIP, LLC
343 S. KIRKWOOD ROAD, SUITE 204
KIRKWOOD, MO 63122
T (314) 725-5889
CONTACT: BRUCE COLEMAN
E: BCOLEMAN@BRICPARTNERSHIP.COM

ENGINEER OF RECORD:
STEVEN J. EHRETT
MO STRUCTURAL LICENSE E-29025
MO CERTIFICATE OF AUTHORITY 000287

No.	Date	Description
	04/14/17	ISSUED FOR BID

DRAWN BY: **TRN**

PROJECT NUMBER: **16020**

SHEET TITLE:
ROOF FRAMING PLAN

S-202

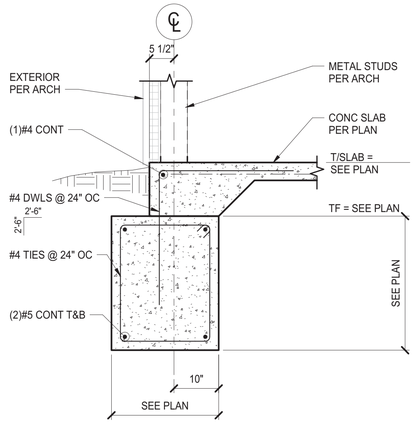

1 S-300 SECTION
3/4" = 1'-0"

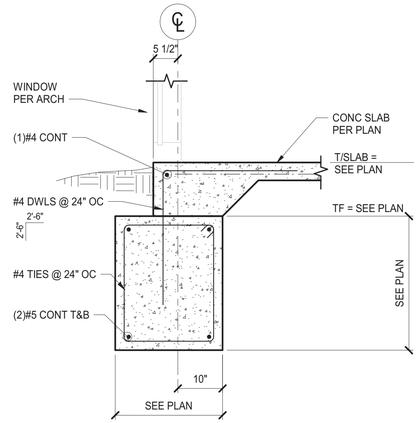

2 S-300 SECTION
3/4" = 1'-0"

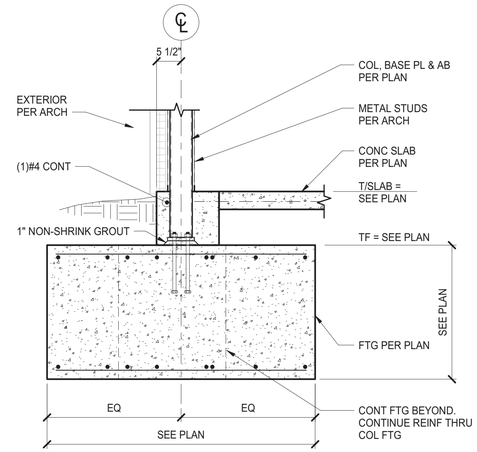

3 S-300 SECTION
3/4" = 1'-0"

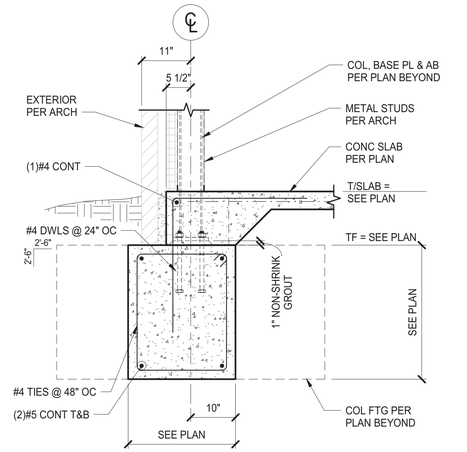

4 S-300 SECTION
3/4" = 1'-0"

Scenic Regional Library
read, explore, grow

SCENIC REGIONAL LIBRARY

WRIGHT CITY BRANCH
60 WILDCAT DRIVE
WRIGHT CITY, MO 63390

JEMA learning architecture interior design
SDA ARCHITECTS

ARCHITECT-OF-RECORD
JEMA
3005 LOCUST ST.
ST. LOUIS, MO 63103
T (314) 531-7400
CONTACT: SCOTT CLARK
E-MAIL: SCLARK@JEMASTL.COM

DESIGN ARCHITECT
SAPP DESIGN ASSOCIATES ARCHITECTS
3750 SOUTH FREMONT
SPRINGFIELD, MO 65804
T (417) 877-9600
F (417) 877-9696
CONTACT: JAMES STUFFLEBEAM
E: STUFFLEBEAM@SDAARCHITECTS.COM

CIVIL
COCHRAN
530A E. INDEPENDENCE DRIVE
UNION, MO 63084
CONTACT: DAVE VAN LEER
T (636) 584-0540
F (636) 584-0512
E-MAIL: DVANLEER@COCHRAN.COM

STRUCTURAL
ALPER AUDI, INC.
1804 BORMAN CIRCLE DRIVE
ST. LOUIS, MO 63146
T (314) 432-8600
F (314) 807-2774
CONTACT: STEVE EHRETT
E-MAIL: STEVE.EHRETT@ALPERAUDI.COM

MECHANICAL, ELECTRICAL, PLUMBING
BRIC PARTNERSHIP, LLC
343 S. KIRKWOOD ROAD, SUITE 204
KIRKWOOD, MO 63122
T (314) 725-5889
CONTACT: BRUCE COLEMAN
E: BCOLEMAN@BRICPARTNERSHIP.COM

ENGINEER OF RECORD:

STEVEN J. EHRETT
MO STRUCTURAL LICENSE E-29025
MO CERTIFICATE OF AUTHORITY 000287

No.	Date	Description
	04/14/17	ISSUED FOR BID

DRAWN BY: **TRN**

PROJECT NUMBER: **16020**

SHEET TITLE:
FOUNDATION SECTIONS

S-300

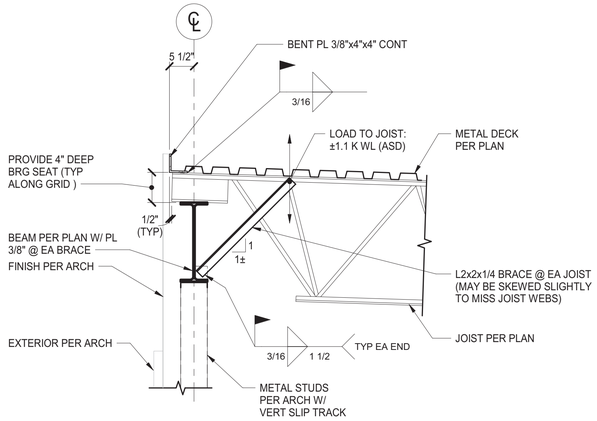

1 S-400 SECTION
3/4" = 1'-0"

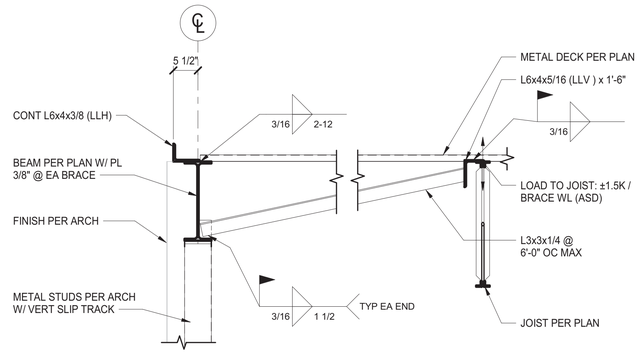

2 S-400 SECTION
3/4" = 1'-0"

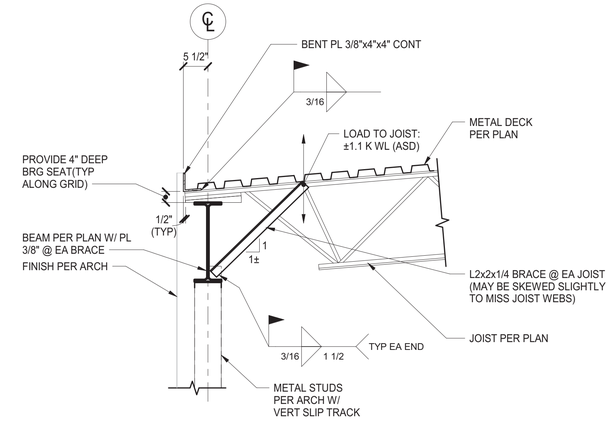

3 S-400 SECTION
3/4" = 1'-0"

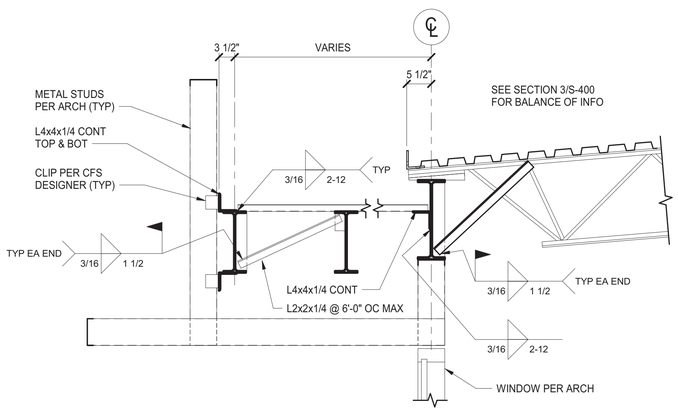

4 S-400 SECTION
3/4" = 1'-0"

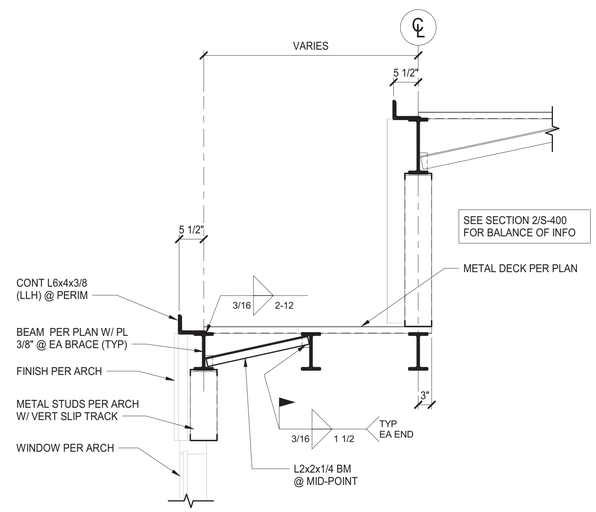

5 S-400 SECTION
3/4" = 1'-0"

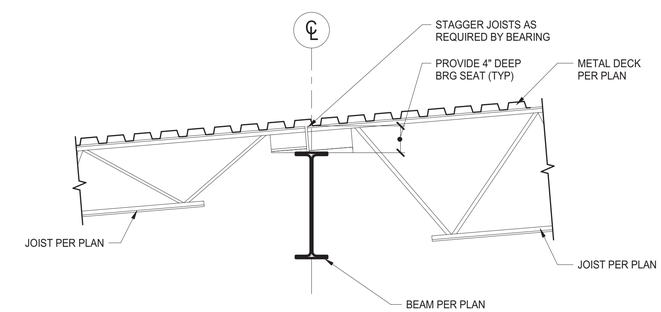

6 S-400 SECTION
3/4" = 1'-0"

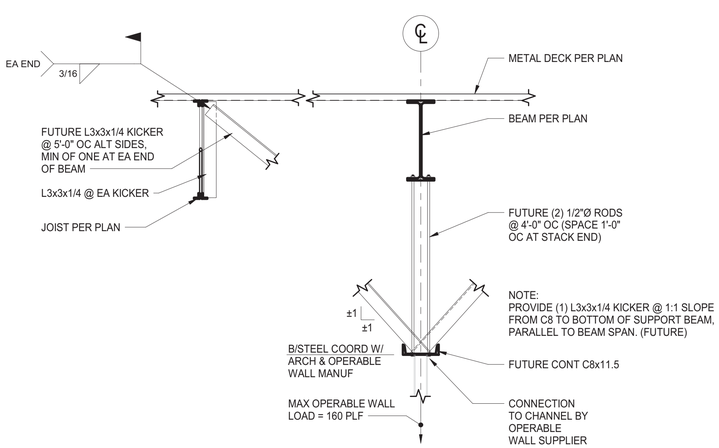

7 S-400 SECTION
3/4" = 1'-0"

Scenic Regional Library
read, explore, grow

SCENIC REGIONAL LIBRARY

WRIGHT CITY BRANCH

60 WILDCAT DRIVE
WRIGHT CITY, MO 63390

JEMA
SDA ARCHITECTS

ARCHITECT-OF-RECORD
JEMA
3005 LOCUST ST.
ST. LOUIS, MO 63103
T (314) 531-7400
CONTACT: SCOTT CLARK
E-MAIL: SCLARK@JEMASTL.COM

DESIGN ARCHITECT
SAPP DESIGN ASSOCIATES ARCHITECTS
3750 SOUTH FREMONT
SPRINGFIELD, MO 65804
T (417) 877-9600
F (417) 877-9696
CONTACT: JAMES STUFFLEBEAM
E: STUFFLEBEAM@SDAARCHITECTS.COM

CIVIL
COCHRAN
530A E. INDEPENDENCE DRIVE
UNION, MO 63084
CONTACT: DAVE VAN LEER
T (636) 584-0540
F (636) 584-0512
E-MAIL: DVANLEER@COCHRAN.COM

STRUCTURAL
ALPER AUDI, INC.
1804 BORMAN CIRCLE DRIVE
ST. LOUIS, MO 63146
T (314) 432-8600
F (314) 807-2774
CONTACT: STEVE EHRETT
E-MAIL: STEVE.EHRETT@ALPERAUDI.COM

MECHANICAL, ELECTRICAL, PLUMBING
BRIC PARTNERSHIP, LLC
343 S. KIRKWOOD ROAD, SUITE 204
KIRKWOOD, MO 63122
T (314) 725-5889
CONTACT: BRUCE COLEMAN
E: BCOLEMAN@BRICPARTNERSHIP.COM

ENGINEER OF RECORD:

STEVEN J. EHRETT
MO STRUCTURAL LICENSE E-29025
MO CERTIFICATE OF AUTHORITY 000287

No.	Date	Description
	04/14/17	ISSUED FOR BID

DRAWN BY: **TRN**

PROJECT NUMBER: **16020**

SHEET TITLE:
FRAMING SECTIONS

S-400

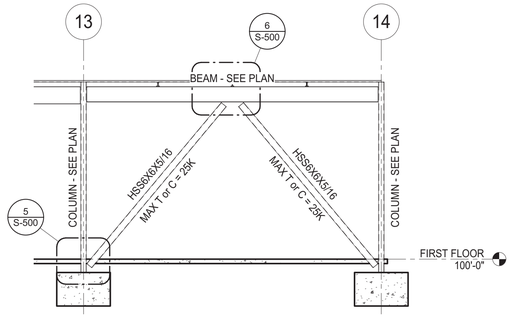

1 S-500 BRACE FRAME ELEVATION
3/16" = 1'-0"

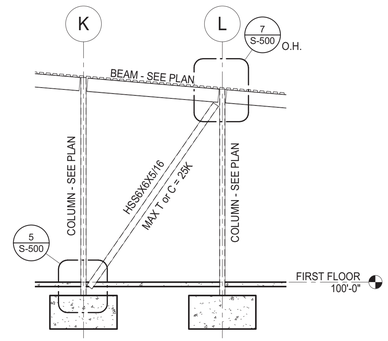

2 S-500 BRACE FRAME ELEVATION
3/16" = 1'-0"

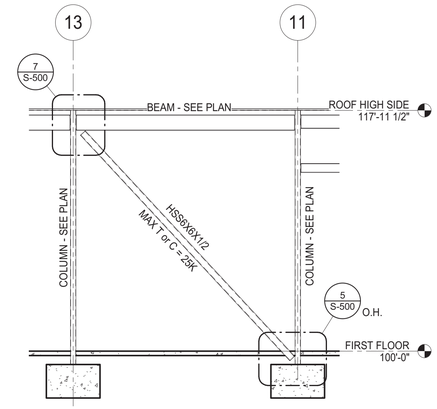

3 S-500 BRACE FRAME ELEVATION
3/16" = 1'-0"

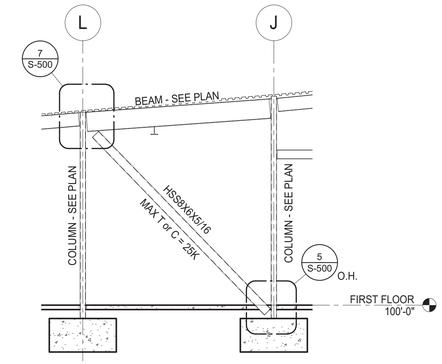

4 S-500 BRACE FRAME ELEVATION
3/16" = 1'-0"

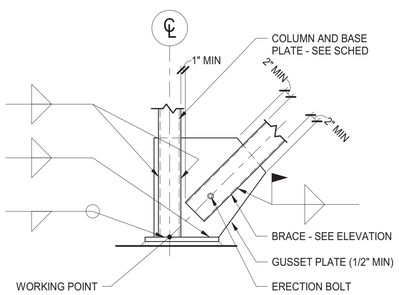

NOTE:

SEE BRACING ELEVATION FOR ORIENTATION OF GUSSET PLATE.

5 S-500 BRACE DETAIL
3/4" = 1'-0"

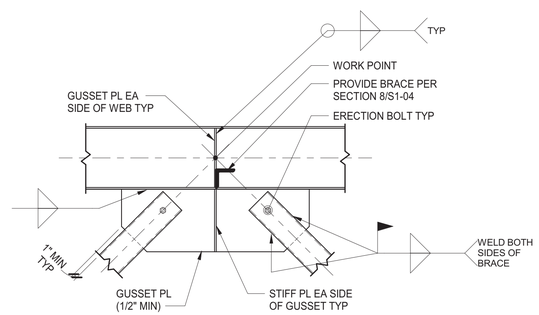

6 S-500 BRACE DETAIL
3/4" = 1'-0"

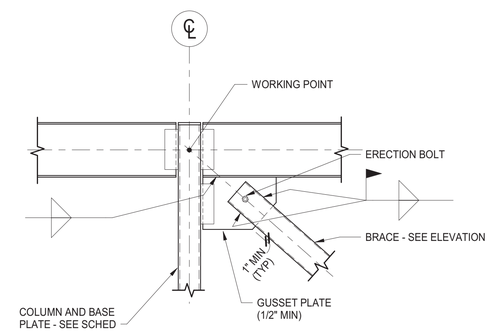

7 S-500 BRACE DETAIL
3/4" = 1'-0"

Scenic Regional Library
read, explore, grow

SCENIC REGIONAL LIBRARY

WRIGHT CITY BRANCH

60 WILDCAT DRIVE
WRIGHT CITY, MO 63390

JEMA
SDA ARCHITECTS

ARCHITECT-OF-RECORD
JEMA
3005 LOCUST ST.
ST. LOUIS, MO 63103
T (314) 531-7400
CONTACT: SCOTT CLARK
E-MAIL: SCLARK@JEMASTL.COM

DESIGN ARCHITECT
SAPP DESIGN ASSOCIATES ARCHITECTS
3750 SOUTH FREMONT
SPRINGFIELD, MO 65804
T (417) 877-9600
F (417) 877-9696
CONTACT: JAMES STUFFLEBEAM
E: STUFFLEBEAM@SDAARCHITECTS.COM

CIVIL
COCHRAN
530A E. INDEPENDENCE DRIVE
UNION, MO 63084
CONTACT: DAVE VAN LEER
T (636) 584-0540
F (636) 584-0512
E-MAIL: DVANLEER@COCHRAN.COM

STRUCTURAL
ALPER AUDI, INC.
1804 BORMAN CIRCLE DRIVE
ST. LOUIS, MO 63146
T (314) 432-8600
F (314) 807-2774
CONTACT: STEVE EHRETT
E-MAIL: STEVE.EHRETT@ALPERAUDI.COM

MECHANICAL, ELECTRICAL, PLUMBING
BRIC PARTNERSHIP, LLC
343 S. KIRKWOOD ROAD, SUITE 204
KIRKWOOD, MO 63122
T (314) 725-5889
CONTACT: BRUCE COLEMAN
E: BCOLEMAN@BRICPARTNERSHIP.COM

ENGINEER OF RECORD:

STEVEN J. EHRETT
MO STRUCTURAL LICENSE E-29025
MO CERTIFICATE OF AUTHORITY 000287

No.	Date	Description
	04/14/17	ISSUED FOR BID

DRAWN BY: **TRN**

PROJECT NUMBER: **16020**

SHEET TITLE:
BRACE FRAME ELEVATIONS

S-500

STEEL COLUMN SCHEDULE

ROOF HIGH SIDE																								ROOF HIGH SIDE
117'-11 1/2" ROOF LOW SIDE																								117'-11 1/2" ROOF LOW SIDE
113'-2 1/2" FIRST FLOOR	HSS4x4x1/4	HSS5x5x1/4	HSS5x5x1/4	HSS5x5x5/16	HSS5x5x5/16	HSS5x5x5/16	HSS4x4x1/4	HSS5x5x5/16	HSS5x5x5/16	HSS5x5x5/16	HSS5x5x1/4	HSS4x4x1/4	HSS5x5x5/16	HSS5x5x5/16	HSS5x5x1/4	HSS5x5x1/4	HSS5x5x1/4	HSS5x5x5/16	HSS5x5x5/16	HSS5x5x1/4	HSS5x5x1/4	HSS5x5x5/16	HSS5x5x5/16	HSS4x4x5/16	113'-2 1/2" FIRST FLOOR
100'-0"																									100'-0"
BASE PL TYPE BP SIZE t"xW"xD" ANCHOR BOLTS	C 3/4"x8"x8" (4) 3/4"Ø	C 3/4"x8"x8" (4) 3/4"Ø	A 3/4"x6"x11" (4) 3/4"Ø	A 3/4"x6"x11" (4) 3/4"Ø	D 3/4"x8"x20" (6) 7/8"Ø	B 3/4"x11"x11" (4) 7/8"Ø	C 3/4"x8"x8" (4) 3/4"Ø	A 3/4"x6"x11" (4) 3/4"Ø	A 3/4"x6"x11" (4) 3/4"Ø	A 3/4"x6"x11" (4) 3/4"Ø	B 3/4"x11"x11" (4) 3/4"Ø	C 3/4"x8"x8" (4) 3/4"Ø	D 3/4"x8"x20" (6) 7/8"Ø	D 3/4"x8"x20" (6) 7/8"Ø	B 3/4"x11"x11" (4) 3/4"Ø	B 3/4"x11"x11" (4) 3/4"Ø	B 3/4"x11"x11" (4) 3/4"Ø	B 3/4"x11"x11" (4) 7/8"Ø	B 3/4"x11"x11" (4) 7/8"Ø	C 3/4"x8"x8" (4) 3/4"Ø	A 3/4"x6"x11" (4) 3/4"Ø	A 3/4"x6"x11" (4) 3/4"Ø	D 3/4"x8"x20" (6) 7/8"Ø	C 3/4"x8"x8" (4) 3/4"Ø	
Column Locations	A-10, B-12	C-3, C-14	C-4, C-6	C-8	C-11	C-13	D-2, F-1	D-3	E-14	G-3	G.8-4	H-15	J-14	K-3	K-6	K.2-6.6	K.2-12.5	L-3	L-14	M-3	M-4	M-5, M-9	M-13, M-14	N-7	

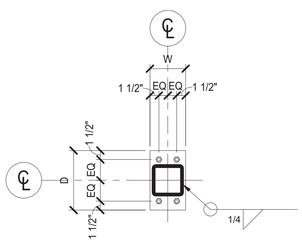

BASE PLATE TYPE A

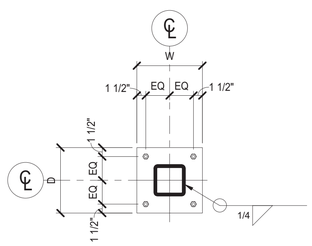

BASE PLATE TYPE B

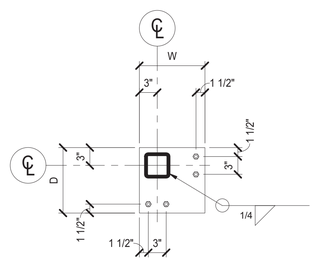

BASE PLATE TYPE C

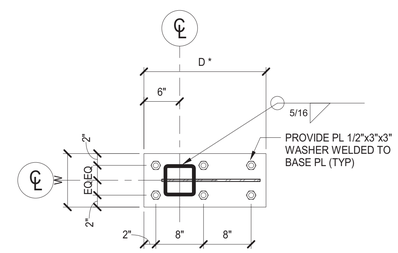

BASE PLATE TYPE D
* COORD W/ BRACE CONNECTION DESIGN

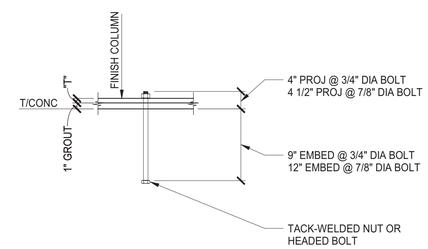

TYPICAL ANCHOR BOLT DETAIL
F1554, GR 36 @ 3/4"Ø
F1554, GR 55 @ 7/8"Ø

TYPICAL BASE PLATE DETAILS

Scenic Regional Library
read, explore, grow

SCENIC REGIONAL LIBRARY
WRIGHT CITY BRANCH
60 WILDCAT DRIVE
WRIGHT CITY, MO 63390

JEMA learning architecture interior design
SDA ARCHITECTS

ARCHITECT-OF-RECORD
JEMA
3005 LOCUST ST.
ST. LOUIS, MO 63103
T (314) 531-7400
CONTACT: SCOTT CLARK
E-MAIL: SCLARK@JEMASTL.COM

DESIGN ARCHITECT
SAPP DESIGN ASSOCIATES ARCHITECTS
3750 SOUTH FREMONT
SPRINGFIELD, MO 65804
T (417) 877-9600
F (417) 877-9696
CONTACT: JAMES STUFFLEBEAM
E: STUFFLEBEAM@SDAARCHITECTS.COM

CIVIL
COCHRAN
530A E. INDEPENDENCE DRIVE
UNION, MO 63084
CONTACT: DAVE VAN LEER
T (636) 584-0540
F (636) 584-0512
E-MAIL: DVANLEER@COCHRAN.COM

STRUCTURAL
ALPER AUDI, INC.
1804 BORMAN CIRCLE DRIVE
ST. LOUIS, MO 63146
T (314) 432-8600
F (314) 807-2774
CONTACT: STEVE EHRETT
E-MAIL: STEVE.EHRETT@ALPERAUDI.COM

MECHANICAL, ELECTRICAL, PLUMBING
BRIC PARTNERSHIP, LLC
343 S. KIRKWOOD ROAD, SUITE 204
KIRKWOOD, MO 63122
T (314) 725-5889
CONTACT: BRUCE COLEMAN
E: BCOLEMAN@BRICPARTNERSHIP.COM

ENGINEER OF RECORD:

STEVEN J. EHRETT
MO STRUCTURAL LICENSE E-29025
MO CERTIFICATE OF AUTHORITY 000287

No.	Date	Description
	04/14/17	ISSUED FOR BID

DRAWN BY: **TRN**

PROJECT NUMBER: **16020**

SHEET TITLE:
COLUMN SCHEDULE & DETAILS

S-600

THE PROFESSIONAL ENGINEER'S SEAL AFFIXED TO THIS SHEET APPLIES ONLY TO THE MATERIAL AND ITEMS SHOWN ON THIS SHEET. ALL DRAWINGS, INSTRUMENTS OR OTHER DOCUMENTS NOT EXHIBITING THIS SEAL SHALL NOT BE CONSIDERED PREPARED BY THIS ENGINEER, AND THIS ENGINEER EXPRESSLY DISCLAIMS ANY AND ALL RESPONSIBILITY FOR SUCH PLAN, DRAWINGS OR DOCUMENTS NOT EXHIBITING THIS SEAL.

GENERAL NOTES

1. THE SPACE ALLOWED FOR MECHANICAL (HVAC, PLUMBING, FIRE PROTECTION) AND ELECTRICAL WORK ABOVE THE SUSPENDED CEILING IS CRITICAL AND REQUIRES COORDINATION BETWEEN TRADES. CONTRACTORS SHALL THOROUGHLY FAMILIARIZE THEMSELVES WITH THE ARCHITECTURAL, STRUCTURAL, MECHANICAL, AND ELECTRICAL DRAWINGS PRIOR TO FABRICATION OR INSTALLATION OF ANY MATERIALS. DUCTWORK SHALL BE HUNG AS CLOSE AS POSSIBLE TO THE STRUCTURE ABOVE UNLESS INDICATED OTHERWISE. REWORK OF PIPING, DUCTWORK, EQUIPMENT LOCATION, CONDUIT, ETC. AS A RESULT OF POOR PLANNING, COORDINATION, OR SCHEDULING SHALL BE THE RESPONSIBILITY OF THE CONTRACTOR.
2. PIPES/DUCTS/ETC. PENETRATING EXTERIOR WALLS AND ROOFS SHALL BE SEALED WEATHER PROOF.
3. CONTRACTOR TO FIRESTOP ALL PENETRATIONS THROUGH FIRE-RATED FLOORS AND WALLS CREATED BY NEW WORK WITH "SPECSEAL SSS" OR EQUAL.
4. PROVIDE OPENING IN DRY WALL ABOVE CEILING TO ALLOW SUPPLY AIR TO RETURN TO HEAT PUMPS OR AIR HANDLERS.
5. REFRIGERANT PIPING TO BE SIZED BY EQUIPMENT MANUFACTURER AND INSTALLED PER THE MANUFACTURER'S INSTALLER'S GUIDE. CONTRACTOR TO SUBMIT DRAWINGS SHOWING ROUTING. SEE SPECIFICATIONS.
6. THERMOSTATS AND ROOM TEMPERATURE SENSORS SHALL BE MOUNTED AT 48" A.F.F. TO THE TOP OF THERMOSTAT UNLESS NOTED OTHERWISE. DO NOT MOUNT IN DIRECT SUNLIGHT OR NEAR HEAT PRODUCING EQUIPMENT.
7. INSTALL H.V.A.C. SYSTEM IN ACCORDANCE WITH ALL STATE AND LOCAL CODES.
8. THE CONTRACTOR SHALL BE RESPONSIBLE FOR THE COORDINATION OF ANY FRAMING REVISIONS, EQUIPMENT LOCATIONS, ADDITION OF CONTROLS, ELECTRICAL CIRCUITING REVISIONS, ETC. THAT RESULT FROM USING EQUIPMENT OTHER THAN INDICATED ON THE DRAWINGS. APPROVAL OF THE SHOP DRAWINGS BY THE ENGINEER WILL NOT WAIVE THE CONTRACTOR OF THIS RESPONSIBILITY.
9. THE CONTRACTOR SHALL HAVE THE FINAL RESPONSIBILITY FOR SYSTEM START UP AND TURN OVER TO THE OWNER.
10. ALL ITEMS INCLUDED ON THESE DRAWINGS AND THE SPECIFICATIONS SHALL BE INCLUDED IN THE CONTRACTOR'S BID. IF THE CONTRACTOR DOES NOT CLEARLY UNDERSTAND THESE PLANS OR IS NOT SURE OF THEIR MEANING, THE CONTRACTOR SHOULD OBTAIN THE ENGINEER'S WRITTEN EXPLANATION AND INTERPRETATION PRIOR TO BID TIME. THE CONTRACTOR WILL BE HELD TO THE INTERPRETATION OF THE ENGINEER.
11. FIRE CAULK ALL PENETRATIONS THRU FIRE RATED PARTITIONS TO MAINTAIN FIRE RATING OF PARTITION.
12. CAULK ALL PENETRATIONS THRU WALLS TO MINIMIZE SOUND PENETRATION THRU WALLS.
13. IT SHALL BE THE CONTRACTOR'S RESPONSIBILITY TO COORDINATE ALL TEMPERATURE CONTROL SYSTEM REQUIREMENTS.
14. ROUTE LINE SIZE PVC CONDENSATE DRAIN PIPING FROM AIR HANDLING UNIT TO NEAREST FLOOR DRAIN. PROVIDE TRAP AT CONNECTION TO AIR HANDLING UNIT.
15. CONTRACTOR WILL BE RESPONSIBLE FOR ALL CUTTING AND PATCHING OF ROOFS/WALLS/FLOORS AND CORE DRILLS REQUIRED TO COMPLETE THEIR RESPECTIVE WORK.
16. THE CONTRACTOR SHALL BE RESPONSIBLE FOR PROVIDING ANY TEMPORARY FENCING AROUND THE LIFT SITE DURING LIFTS.

GENERAL NOTES (AIR SIDE)

1. NOTE, ALL DUCTWORK OFFSETS ARE NOT SHOWN. THE CONTRACTOR SHALL MODIFY DUCTS AND OFFSETS TO COORDINATE WITH THE BUILDING STRUCTURE AND ALL TRADE REQUIREMENTS.
2. ALL DUCTWORK SHALL BE CONSTRUCTED AND INSTALLED PER THE LATEST VERSION OF THE S.M.A.C.N.A. H.V.A.C. DUCT CONSTRUCTION STANDARDS, UNLESS SPECIFIED MORE STRINGENTLY IN THESE CONSTRUCTION DOCUMENTS. MINIMUM DUCT GAUGE SHALL BE 24.
3. 90° DUCT ELBOWS SHALL BE EQUIPPED WITH SINGLE THICKNESS TURNING VANES MOUNTED TO A PREFABRICATED VANE RAIL.
4. ALL ELBOWS SHALL BE SUPPLIED WITH TURNING VANES, WHETHER SHOWN ON DOCUMENTS OR NOT.
5. ALL 90° AND 45° RECTANGULAR RADIUS ELBOWS TO BE FABRICATED WITH AN INSIDE RADIUS NO LESS THAN 1/2 OF THE WIDTH OF THE DUCT - WHERE THE WIDTH OF THE DUCT IS DEFINED AS THE DIMENSION OF THE DUCT IN THE PLANE IN WHICH THE DUCT IS TURNING.
6. RECTANGULAR DUCTWORK SHALL BE SUPPORTED PER THE S.M.A.C.N.A STANDARDS AND AT EACH CHANGE IN DIRECTION.
7. PROVIDE MANUAL, SINGLE BLADE, BALANCING DAMPERS WITH LOCKING QUADRANT AND INTEGRAL POSITION INDICATOR ON ALL RUNOUTS TO SUPPLY AND EXHAUST AIR DEVICES - EXCEPT THOSE LOCATED IN AREAS WITH PLASTER CEILINGS AND ARE NOT ACCESSIBLE (DAMPER SHALL BE INTEGRAL WITH THE AIR DEVICE IN THESE CASES.)
8. PROVIDE MANUAL OPPOSED BLADE DAMPERS WITH LOCKING QUADRANT AND INTEGRAL POSITION INDICATOR ON ALL RECTANGULAR BRANCH DUCTS AND AIR DEVICE RUNOUTS THAT EXCEED 12" IN HEIGHT.
9. MANUAL SPLITTER DAMPERS ARE NOT ACCEPTABLE.
10. NOT ALL OF THE ACCESS DOORS IN THE DUCT SYSTEMS OR PLENUMS ARE SHOWN. PROVIDE ACCESS DOORS IN ALL DUCT SYSTEMS OR PLENUMS WHERE REQUIRED TO ACCESS AND MAINTAIN MOTORIZED OR AUTOMATIC DAMPER BLADES AND LINKAGES.
11. ALL DUCTWORK SHALL BE SUPPORTED FROM ROOF OR FLOOR STRUCTURE ABOVE. DUCTWORK SHALL NOT LAY ON TOP OF CEILING OR LIGHT FIXTURES.
12. FLEXIBLE DUCT RUNOUTS TO AIR DEVICES SHALL NOT EXCEED 5'-0" IN LENGTH. FLEXIBLE RUNOUTS SHALL BE TRIMMED TO THE MINIMUM LENGTH NECESSARY TO MAKE THE CONNECTION.
13. WHERE DAMPER ACTUATORS ARE MOUNTED TO DUCTWORK OR PLENUMS PROVIDE A HEAVY GAGE BASE PLATE, ANGLE STIFFENERS, OR MOUNTING AS REQUIRED TO ELIMINATE DEFLECTION OF DUCTWORK DURING ACTUATOR OPERATION.
14. FLEXIBLE DUCT CONNECTIONS TO EQUIPMENT ARE NOT SHOWN ON THE DRAWINGS. PROVIDE EXTRA WIDE FLEXIBLE CONNECTIONS ON THE SUPPLY DUCT AND THE RETURN DUCT OF EACH MAKE-UP AIR UNIT, ROOFTOP UNIT, AND EACH AIR HANDLING UNIT. PROVIDE STANDARD FLEXIBLE CONNECTIONS ON ALL BLOWER COILS, EXHAUST FANS, SUPPLY FANS, AND DUST COLLECTOR.
15. PROVIDE 45° FLARED TAKEOFFS FOR ALL RECTANGULAR BRANCH CONNECTIONS TO THE MAIN DUCT.
16. ALL DAMPER ACTUATORS FOR DUCT SYSTEMS OR EQUIPMENT THAT COMMUNICATES DIRECTLY WITH THE OUTDOORS SHALL BE SPRING RETURN TYPE TO CLOSE IN THE EVENT OF A POWER FAILURE.
17. PROVIDE 1-1/2 HOUR RATED FIRE DAMPERS IN THE DUCTWORK WHERE INDICATED ON THE PLANS AND REQUIRED BY CODE. FIRE DAMPERS SHALL BE PROVIDED WITH AN ACCESS PANEL LARGE ENOUGH TO PERMIT INSPECTION AND MAINTENANCE OF THE DAMPER. ACCESS PANELS TO FIRE DAMPERS SHALL BE PERMANENTLY IDENTIFIED ON THE EXTERIOR BY A NAMEPLATE WITH THE WORDS "FIRE DAMPER". THE LETTERS ON THE FIRE DAMPER LABELS SHALL NOT BE LESS THAN 1/2 INCH IN HEIGHT.
18. THE SPACE ABOVE THE SUSPENDED CEILINGS SHALL BE USED AS A RETURN AIR PLENUM. IT IS THE RESPONSIBILITY OF THE MECHANICAL CONTRACTOR TO COORDINATE THE WORK OF OTHER TRADES TO PROVIDE ADEQUATE SPACE FOR THE FLOW OF RETURN AIR (250 FPM MAXIMUM VELOCITY). WHERE PARTITIONS EXTEND TO THE CONSTRUCTION ABOVE, OPENINGS SHALL BE PROVIDED IN THE PARTITION ABOVE THE CEILING.
19. DUCT DIMENSIONS NOTED ON THE DRAWINGS ARE NET FREE AREA. WHERE ACOUSTIC LINER IS INDICATED OR SPECIFIED THE SHEET METAL SIZE MUST BE INCREASED TO ACCOMMODATE THE LINER.
20. AREAS ABOVE THE CEILING SERVE AS A RETURN AIR PLENUM. ALL MATERIALS EXPOSED IN THE PLENUM SHALL HAVE A 25/50 SMOKE/FLAME SPREAD RATING.
21. ALL DUCT RUNOUTS TO AIR DEVICES ARE TO BE THE SAME SIZE AS THE NECK OF THE AIR DEVICE UNLESS NOTED OTHERWISE.
22. DIRECTIONAL ARROWS ON AIR DEVICES INDICATE THROWS FOR AIR DEVICE. VERIFY PROPER ADJUSTMENT OF THROW DEFLECTION VANES OF ALL AIR DEVICES PRIOR TO BEGINNING BALANCING. WHERE NO ARROWS SHOW, THROW SHALL BE 4-WAY.
23. ALL BATHROOM EXHAUST DUCTWORK SHALL BE EXTERNALLY INSULATED.
24. EXPOSED GALVANIZED DUCTWORK SHALL BE PAINTABLE. GENERAL CONTRACTOR TO PAINT ALL EXPOSED DUCTWORK. FINAL COLOR TO BE APPROVED BY THE ARCHITECT.

HEATING AND VENTILATION SYMBOLS

SA	SOUND ATTENUATOR
FC	FLEXIBLE CONNECTION
	SPLITTER DAMPER
VD	MANUAL VOLUME DAMPER
BD	GRAVITY BACKDRAFT DAMPER
MD	MOTORIZED VOLUME DAMPER
FD	FIRE DAMPER (FD)
SD	SMOKE DAMPER (SD)
FD	FIRE DAMPER (FSD)
TV	TURNING VANES
	RETURN/TRANSFER/COMBUSTION AIR DISCHARGE DUCT UP
	RETURN/TRANSFER/COMBUSTION AIR DISCHARGE DUCT DOWN
	SUPPLY AIR/COMBUSTION AIR INTAKE UP
	SUPPLY AIR/COMBUSTION AIR INTAKE DOWN
	EXHAUST AIR DUCT UP
	EXHAUST AIR DUCT DOWN
	ROUND DUCT DOWN
	ROUND DUCT UP
	INCLINED DROP IN THE DIRECTION OF AIR FLOW
	INCLINED RISE IN THE DIRECTION OF AIR FLOW
	ECCENTRIC DUCT TRANSITION
	CONCENTRIC DUCT TRANSITION
	RECTANGULAR DUCT TO ROUND DUCT TRANSITION
FXD	FLEXIBLE DUCT
	CEILING AIR DEVICE
	AIR DEVICE THROW DESIGNATION: (HATCHING DESIGNATES ZERO THROW)
	SIDEWALL AIR DEVICE
	DAMPERED SHOE DUCT TAP FROM RECT. MAIN
	SHOE DUCT TAP FROM RECT. MAIN
	45° DAMPERED DUCT TAP
	45° DUCT TAP
	SADDLE TAP
	STRAIGHT RECT. DUCT TAP FROM RECT. MAIN
	STRAIGHT RECT. DUCT TAP FROM ROUND MAIN
S-1 / 1000	(AIR DEVICE TYPE) - (SCHEDULE NUMBER) (AIR FLOW IN CFM)
24" x 12" RA	DUCT SIZE DESIGNATION: 1ST FIGURE SIDE SHOWN. (SIZE SHOWN IS FREE AREA SIZE, ALLOWANCE HAS NOT BEEN MADE FOR INTERIOR INSULATION WHERE SPECIFIED.)
24"/12"	FLAT OVAL DUCT

AIR DEVICE TYPE:
S - SUPPLY DIFFUSER
T - TRANSFER GRILLE
R - RETURN GRILLE
E - EXHAUST GRILLE

DUCT SYSTEM TYPE:
SA - SUPPLY AIR
RA - RETURN AIR
EA - EXHAUST AIR
TA - TRANSFER AIR
OA - OUTDOOR AIR

NOTE: NOT ALL SYMBOLS OR ABBREVIATIONS MAY BE USED.

CS	CONDENSING WATER SUPPLY
CR	CONDENSING WATER RETURN
DTS	DUAL TEMPERATURE SUPPLY
DTR	DUAL TEMPERATURE RETURN
FOS	FUEL OIL SUPPLY
FOR	FUEL OIL RETURN
FOV	FUEL OIL VENT
MWL	MAKE - UP WATER LINE
D	DRAIN LINE (OTHER THAN PLUMBING)
VL	VENT LINE (OTHER THAN PLUMBING)
RD	REFRIGERANT DISCHARGE
RL	REFRIGERANT LIQUID
RS	REFRIGERANT SUCTION
G	GAS
CWS	CHILLED WATER SUPPLY
CWR	CHILLED WATER RETURN
CA	COMPRESSED AIR
LPS	LOW PRESSURE STEAM
MPS	MEDIUM PRESSURE STEAM
LPC	LOW PRESSURE CONDENSATE
MPC	MEDIUM PRESSURE CONDENSATE
HPS	HIGH PRESSURE STEAM
HPC	HIGH PRESSURE CONDENSATE
CPD	CONDENSATE PUMP DISCHARGE
HWS	HEATING WATER SUPPLY
HWR	HEATING WATER RETURN
NOS	NITROGEN OXIDE SENSOR
T	THERMOSTAT / TEMPERATURE SENSOR
S	TEMPERATURE SENSOR
CO	CARBON MONOXIDE SENSOR
H	HUMIDISTAT

MISCELLANEOUS SYMBOLS

	EQUIPMENT OR PLUMBING FIXTURE DESIGNATION
	(RISER INDICATION P=PLUMBING, P =KITCHEN, P =ACID) RISER DESIGNATION (RISER NUMBER)
	(DETAIL NUMBER) DETAIL DESIGNATION (SHEET NUMBER WHERE DETAIL IS FOUND)
	(SECTION NUMBER) SECTION DESIGNATION (SHEET NUMBER WHERE SECTION IS FOUND)
	KEYED NOTES
	REVISIONS
AP	ACCESS PANEL
	NEW CONNECTION
AFM	AIR FLOW MEASURING STATION
CVR	CONSTANT VOLUME REGULATOR

PIPING SPECIALTIES

GV	GATE VALVE
CV	CHECK VALVE
GLV	GLOBE VALVE
BLV	BALL VALVE
STR	STRAINER
U	UNION
BC	BALANCING COCK
SOC	SHUT-OFF COCK
SLV	SOLENOID VALVE
BFV	BUTTERFLY VALVE
FS	FLOW SWITCH
	VALVE W/ SUPERVISORY SWITCH
FCV	FLOW CONTROL VALVE (GPM INDICATED)
T&PR	TEMPERATURE AND PRESSURE RELIEF VALVE
PG	PRESSURE GAUGE
TH	THERMOMETER (TUBE OR DIAL AS INDICATED)
PRV	PRESSURE REDUCING VALVE
	DIRECTION OF FLOW
	ANCHORS
	PIPE GUIDES
MV	MOTORIZED VALVE
DV	DIAPHRAGM VALVE
LPV	LUBRICATED VALVE
HEV	HOSE END VALVE
SWV	STOP AND WASTE VALVE
TWV	3 - WAY VALVE (MIXING OR BY-PASS AS INDICATED)
	PETES PLUG
RV	RELIEF VALVE
FC	FLEXIBLE PIPE CONNECTION
AVM	AIR VENT (MANUAL)
AVA	AIR VENT (AUTOMATIC)
EX	EXPANSION JOINT
CCR	CONCENTRIC REDUCER
	TEE (SIDE OUTLET UP)
	TEE (SIDE OUTLET DOWN)
	ELBOW (TURNED UP)
	ELBOW (TURNED DOWN)
BMD	COMBINATION BALANCING & MEASURING DEVICE
ECR	ECCENTRIC REDUCER
FMD	FLOW MEASURING DEVICE
	STEAM TRAP
	BALANCING VALVE
	FLEXIBLE CONNECTION
	ELBOW
	TEE

ABBREVIATIONS

FFE	FINISH FLOOR ELEVATION
AFF	ABOVE FINISH FLOOR
TE	TOP ELEVATION
BE	BOTTOM ELEVATION
FL	FLOW LINE
INV	INVERT ELEVATION
℄	CENTER LINE
GC	GENERAL CONSTRUCTION CONTRACTOR
HAC	HEATING & AIR CONDITIONING CONTRACTOR
PC	PLUMBING CONTRACTOR
EC	ELECTRICAL CONTRACTOR
ACS	AUTOMATIC CONTROL SUB-CONTRACTOR
FPC	FIRE PROTECTION CONTRACTOR
HSC	HALON SUB-CONTRACTOR
KEC	KITCHEN EQUIPMENT CONTRACTOR
MC	MECHANICAL CONTRACTOR
TCC	TEMPERATURE CONTROL CONTRACTOR

Scenic Regional Library
read, explore, grow

SCENIC REGIONAL LIBRARY
WRIGHT CITY BRANCH
60 WILDCAT DRIVE
WRIGHT CITY, MO 63390

JEMA
SDA ARCHITECTS

ARCHITECT
JEMA
3005 LOCUST ST.
ST. LOUIS, MO 63103
T (314) 531-7400
CONTACT: SCOTT CLARK
E-MAIL: SCLARK@JEMASTL.COM

ARCHITECT
SAPP DESIGN ASSOCIATES ARCHITECTS
3750 SOUTH FREMONT
SPRINGFIELD, MO 65804
T (417) 877-9600
F (417) 877-9696
CONTACT: JAMES STUFFLEBEAM
E: STUFFLEBEAM@SDAARCHITECTS.COM

CIVIL
COCHRAN
530A E. INDEPENDENCE DRIVE
UNION, MO 63084
CONTACT: DAVE VAN LEER
T (636) 584-0540
F (636) 584-0512
E-MAIL: DVANLEER@COCHRAN.COM

STRUCTURAL
ALPER AUDI, INC.
1804 BORMAN CIRCLE DRIVE
ST. LOUIS, MO 63146
T (314) 432-8600
F (314) 807-2774
CONTACT: STEVE EHRETT
E-MAIL: STEVE.EHRETT@ALPERAUDI.COM

MECHANICAL, ELECTRICAL, PLUMBING
BRIC PARTNERSHIP, LLC
343 S. KIRKWOOD ROAD, SUITE 204
KIRKWOOD, MO 63122
T (314) 725-5889
CONTACT: BRUCE COLEMAN
E: BCOLEMAN@BRICPARTNERSHIP.COM

ENGINEER OF RECORD:

PRELIMINARY
NOT FOR CONSTRUCTION

DAVID E. LAUVER
MO. LICENSE NO. 2007002812
BRIC MO CERTIFICATE OF AUTHORITY 2002028690

No.	Date	Description
	04/14/17	ISSUED FOR BID

DRAWN BY: **AMK**

PROJECT NUMBER: **16-1161.03**

SHEET TITLE:
LEGEND, SYMBOLS, NOTES, & ABBREVIATIONS - MECHANICAL

M-001

THE PROFESSIONAL ENGINEER'S SEAL AFFIXED TO THIS SHEET APPLIES ONLY TO THE MATERIAL AND ITEMS SHOWN ON THIS SHEET. ALL DRAWINGS, INSTRUMENTS OR OTHER DOCUMENTS NOT EXHIBITING THIS SEAL SHALL NOT BE CONSIDERED PREPARED BY THIS ENGINEER, AND THIS ENGINEER EXPRESSLY DISCLAIMS ANY AND ALL RESPONSIBILITY FOR SUCH PLAN, DRAWINGS OR DOCUMENTS NOT EXHIBITING THIS SEAL.

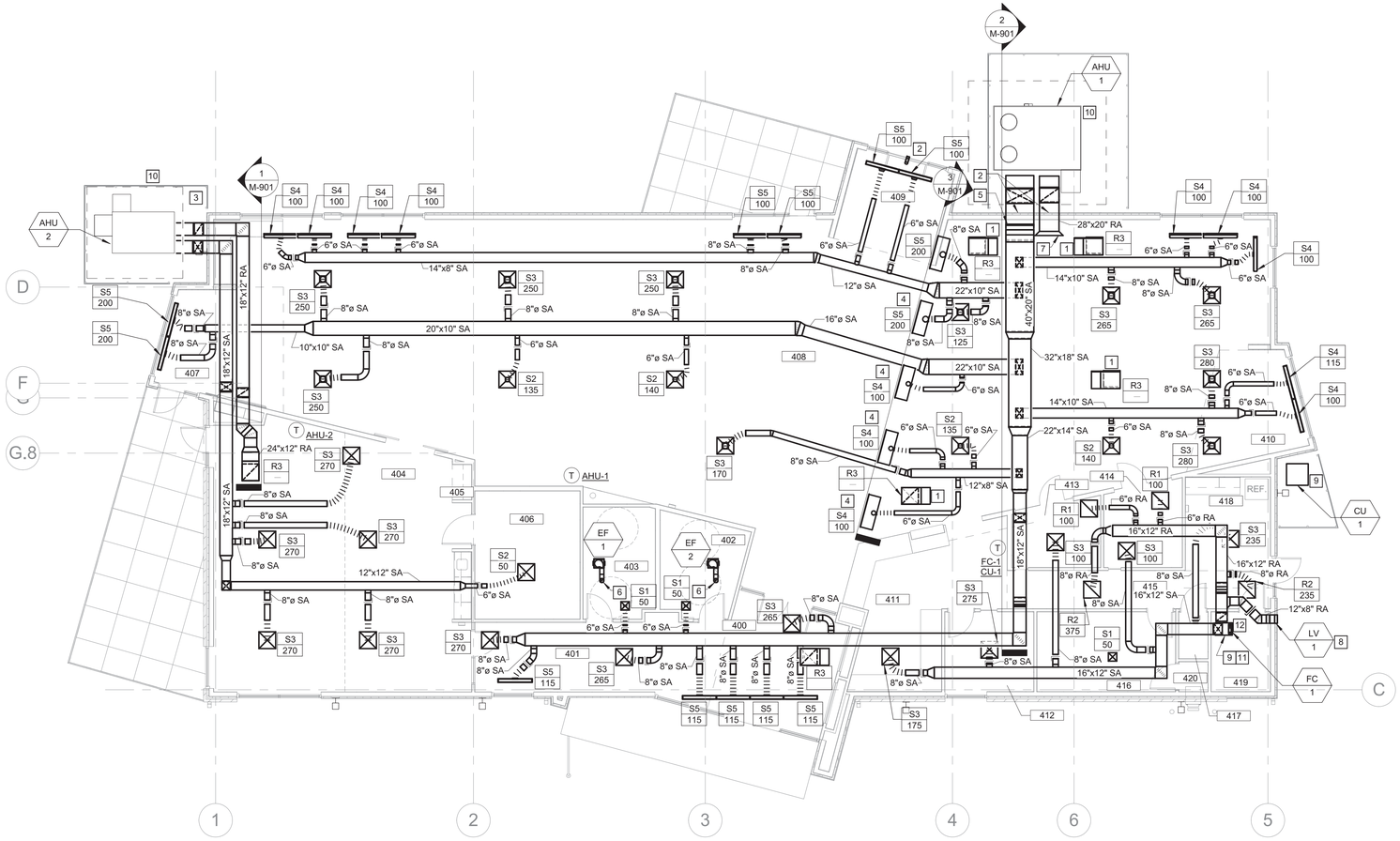

1 M-201 FLOOR PLAN - FIRST FLOOR - MECHANCIAL
1/8" = 1'-0"

GENERAL NOTES

1 SEE SHEET M-001 FOR GENERAL NOTES THAT APPLY TO THIS SHEET.

KEYED NOTES

#	
1	PROVIDE RETURN AIR BOOT. SEE DETAIL FOR ADDITIONAL REQUIREMENTS.
2	ROUTE SUPPLY AND RETURN DUCTWORK UP EXTERIOR WALL. PENETRATE THROUGH WALL WITH BOTTOM OF DUCT AT 4'-8" AFF. PROVIDE DRAINABLE ALUMINUM JACKET OVER INSULATION.
3	ROUTE SUPPLY AND RETURN DUCTWORK UP EXTERIOR WALL. PENETRATE THROUGH WALL WITH BOTTOM OF DUCT AT 15'-1" AFF. PROVIDE DRAINABLE ALUMINUM JACKET OVER INSULATION.
4	MOUNT SLOT DIFFUSER TO SIDEWALL OF SOFFIT. SEE SECTION FOR MOUNTING HEIGHTS.
5	SLOPE DUCT WITH ROOF. SEE SECTION FOR FURTHER DETAILS.
6	8" Ø EXHAUST DUCT UP THROUGH ROOF. TERMINATE WITH GOOSENECK. SEE DETAILS FOR FURTHER REQUIREMENTS.
7	PROVIDE 45°, 6" LONG BELL MOUTH FITTING AT INLET OF RETURN AIR DUCT.
8	TRANSITION DUCT AS REQUIRED TO CONNECT TO LOUVER. TOP OF DUCT SHALL BE FLUSH WITH TOP OF LOUVER; SLOPE BOTTOM OF DUCT DOWN TOWARDS LOUVER. TRANSITION SHALL BE A MINIMUM OF 12" LONG.
9	CONTRACTOR SHALL FIELD ROUTE REFRIGERANT PIPING BETWEEN FC-1 AND CU-3. REFRIGERANT PIPING SHALL BE ROUTED ON INTERIOR OF BUILDING UNTIL PENETRATION IS WITHIN FENCED IN REGION. ALL PIPING INSULATION SHALL BE PROVIDED WITH PAINTABLE ALUMINUM JACKETS.
10	ROUTE CONDENSATE PIPING TO FRENCH DRAIN. LOCATE FRENCH DRAIN A MINIMUM OF 2'-0" AWAY FROM SLAB EDGE. PROVIDE SUPPORTS FOR CONDENSATE PIPING AT A MINIMUM OF 5'-0" INTERVALS. DRAIN PIPING SHALL BE COPPER.
11	ROUTE CONDENSATE DRAIN PIPING TO FLOOR DRAIN IN ROOM. DRAIN PIPING SHALL BE COPPER.
12	4" Ø FLUE UP FROM FC-1 THROUGH ROOF.

ROOM SCHEDULE

Number	Name
100	CIRCULATION
400	VESTIBULE
401	CORRIDOR
402	MENS
403	WOMENS
404	MEETING ROOM
405	COATS
406	STORAGE
407	CHILDREN AREA
408	CIRCULATION
409	ADULT AREA
410	TEEN AREA
411	WORK ROOM
412	OFFICE
413	STUDY
414	STUDY
415	CORRIDOR
416	STORAGE
417	JANITORS CLOSET
418	BREAK ROOM
419	MECH / ELEC
420	BOOK DROP

Scenic Regional Library
read, explore, grow

SCENIC REGIONAL LIBRARY
WRIGHT CITY BRANCH
60 WILDCAT DRIVE
WRIGHT CITY, MO 63390

JEMA
SDA ARCHITECTS

ARCHITECT
JEMA
3005 LOCUST ST.
ST. LOUIS, MO 63103
T (314) 531-7400
CONTACT: SCOTT CLARK
E-MAIL: SCLARK@JEMASTL.COM

ARCHITECT
SAPP DESIGN ASSOCIATES ARCHITECTS
3750 SOUTH FREMONT
SPRINGFIELD, MO 65804
T (417) 877-9600
F (417) 877-9696
CONTACT: JAMES STUFFLEBEAM
E: STUFFLEBEAM@SDAARCHITECTS.COM

CIVIL
COCHRAN
530A E. INDEPENDENCE DRIVE
UNION, MO 63084
CONTACT: DAVE VAN LEER
T (636) 584-0540
F (636) 584-0512
E-MAIL: DVANLEER@COCHRAN.COM

STRUCTURAL
ALPER AUDI, INC.
1804 BORMAN CIRCLE DRIVE
ST. LOUIS, MO 63146
T (314) 432-8600
F (314) 807-2774
CONTACT: STEVE EHRETT
E-MAIL: STEVE.EHRETT@ALPERAUDI.COM

MECHANICAL, ELECTRICAL, PLUMBING
BRIC PARTNERSHIP, LLC
343 S. KIRKWOOD ROAD, SUITE 204
KIRKWOOD, MO 63122
T (314) 725-5889
CONTACT: BRUCE COLEMAN
E: BCOLEMAN@BRICPARTNERSHIP.COM

ENGINEER OF RECORD:

PRELIMINARY
NOT FOR CONSTRUCTION

DAVID E. LAUVER
MO. LICENSE NO. 2007002812
BRIC MO CERTIFICATE OF AUTHORITY 2002028690

No.	Date	Description
	04/14/17	ISSUED FOR BID

DRAWN BY: **DEV**

PROJECT NUMBER: **16-1161.03**

SHEET TITLE:
FLOOR PLAN - FIRST FLOOR - MECHANICAL

M-201

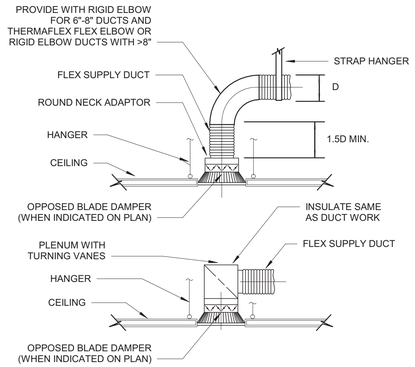

1 M-801 CEILING DIFFUSER TAKE-OFFS
N.T.S.

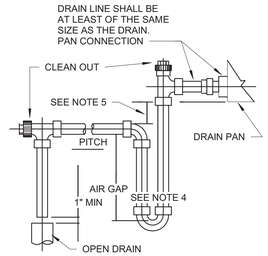

CONNECTED COOLING LOAD(T)	MIN* PIPE SIZE
2	3/4"
2.1-5	1"
5.1-50	1-1/2"
51-160	2"
161-300	3"
301-425	4"

* NOT SMALLER THAN OUTLET SIZE

NOTES:
1. MANUALLY PRIME TRAP BEFORE START UP.
2. SUPPORT DRAIN LINES TO PREVENT SAG.
3. ALLOW SUFFICIENT SPACE BELOW PAN FOR TRAP AND PITCH TO DRAIN.
4. 6" FOR DRAW THRU & 4" FOR BLOW THRU UNITS
5. 1" TO 4" FOR DRAW THRU UNITS ONLY.

2 M-801 CONDENSATE DRAIN TRAP
N.T.S.

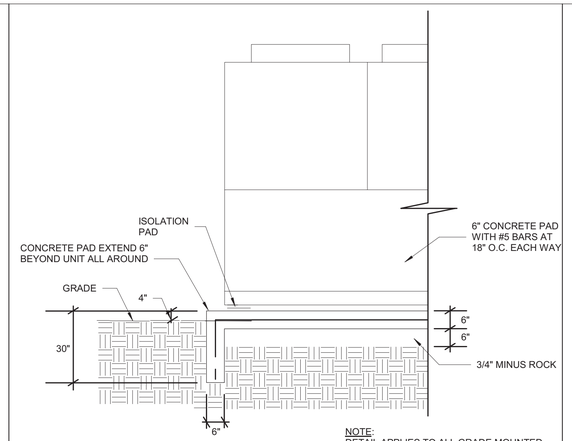

NOTE:
DETAIL APPLIES TO ALL GRADE MOUNTED EQUIPMENT WHERE PAD IS NOT DETAILED ON STRUCTURAL, ARCHITECTURAL, OR CIVIL DRAWINGS.

3 M-801 GRADE MOUNTED EQUIPMENT
N.T.S.

THE PROFESSIONAL ENGINEER'S SEAL AFFIXED TO THIS SHEET APPLIES ONLY TO THE MATERIAL AND ITEMS SHOWN ON THIS SHEET. ALL DRAWINGS, INSTRUMENTS OR OTHER DOCUMENTS NOT EXHIBITING THIS SEAL SHALL NOT BE CONSIDERED PREPARED BY THIS ENGINEER, AND THIS ENGINEER EXPRESSLY DISCLAIMS ANY AND ALL RESPONSIBILITY FOR SUCH PLAN, DRAWINGS OR DOCUMENTS NOT EXHIBITING THIS SEAL.

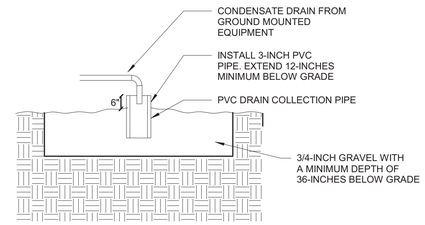

NOTES:
1. FRENCH DRAIN SHALL HAVE PLAN DIMENSIONS OF 24"x24".

4 M-801 FRENCH DRAIN DETAIL
N.T.S.

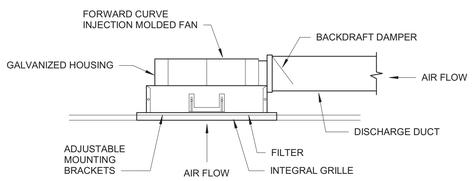

5 M-801 CEILING MOUNTED EXHAUST FAN DETAIL
N.T.S.

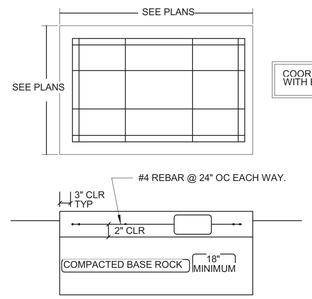

COORDINATE FINAL SIZE OF PAD WITH EQUIPMENT TO BE PROVIDED.

NOTES:
1. CONCRETE SHALL BE IN ACCORDANCE WITH THE LATEST EDITION OF THE ACI CODE AND AIR ENTRAINED, IT SHALL HAVE A MINIMUM COMPRESSIVE STRENGTH OF 3000 PSI AT 28 DAYS. THE SAND AND GRAVEL ARE TO BE CLEAN AND HARD, THE AIR ENTRAPMENT SHALL BE 4 TO 7% BY VOLUME. THE MIX SHALL HAVE 5 BAGS OF PORTLAND CEMENT TYPE-1 PER CUBIC YARD OF CONCRETE.

2. PAD SHALL BE POURED MONOLITHICALLY, WITH NO COLD JOINTS.

3. HONEY COMBING OR POT MARKS IN THE FACE OF THE SLAB ARE NOT ACCEPTABLE. IF THIS OCCURS, THE CONTRACTOR MAY BE REQUIRED TO REPLACE THE CONDENSING UNIT PAD AT THE A/E'S OPTION.

4. NO FOOTING IS TO BE EXCAVATED WITHOUT HAVING REINFORCING AND CONCRETE READY TO PLACE WITHIN THAT WORKING DAY.

5. IN THE EVENT THAT ORGANIC SOIL IS FOUND BELOW FOOTING, THE SOIL SHALL BE REMOVED AND REPLACED WITH COMPACTED BASE ROCK.

6. ALL REINFORCING BARS SHALL BE DEFORMED #4 BILLET STEEL CONFORMING TO ASTM A615, GRADE 60. BARS SHALL BE FREE OF ANY GREASE, RUST OR SCALE AT THE TIME OF PLACEMENT. TIE ALL STEEL AT INTERSECTIONS. SPACING SHALL NOT EXCEED 24" ON CENTERS.

7. TOP SURFACES OF CONCRETE SHALL HAVE A STEEL TROWEL FINISH.

6 M-801 EQUIPMENT PAD DETAIL
N.T.S.

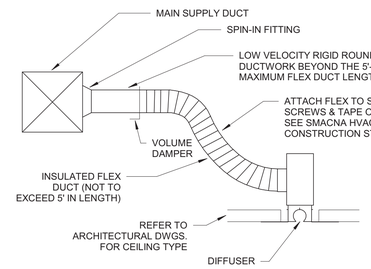

7 M-801 DIFFUSER DETAIL
N.T.S.

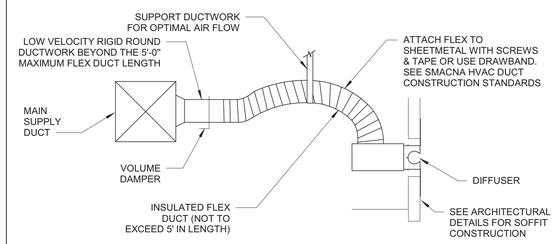

8 M-801 SIDEWALL DIFFUSER DETAIL
N.T.S.

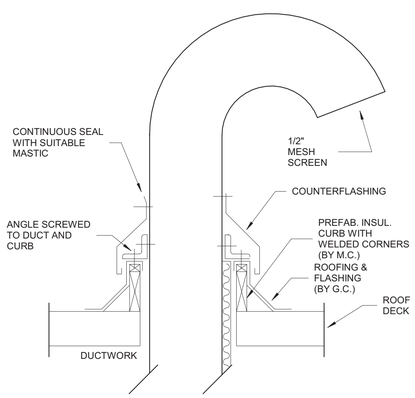

9 M-801 GOOSENECK THROUGH ROOF DETAIL
N.T.S.

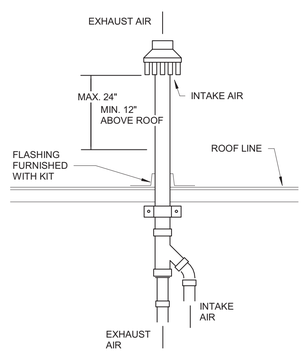

NOTES:
1. INSULATE PIPING AS REQUIRED IN SPECIFICATION.
2. SEE SPECIFICATION FOR ADDITIONAL REQUIREMENTS PERTAINING TO COMBUSTION AIR AND VENT PIPING.

10 M-801 FURNACE CONCENTRIC ROOF ADAPTER TERMINATION DETAIL
N.T.S.

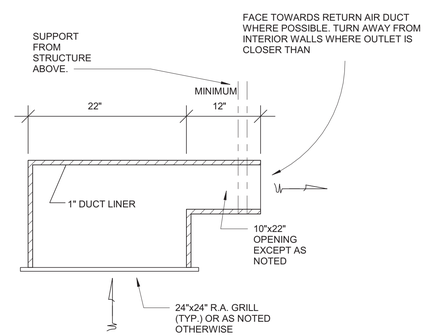

11 M-801 RETURN AIR BOOT
N.T.S.

Scenic Regional Library
read, explore, grow

SCENIC REGIONAL LIBRARY
WRIGHT CITY BRANCH
60 WILDCAT DRIVE
WRIGHT CITY, MO 63390

JEMA
SDA ARCHITECTS

ARCHITECT
JEMA
3005 LOCUST ST.
ST. LOUIS, MO 63103
T (314) 531-7400
CONTACT: SCOTT CLARK
E-MAIL: SCLARK@JEMASTL.COM

ARCHITECT
SAPP DESIGN ASSOCIATES ARCHITECTS
3750 SOUTH FREMONT
SPRINGFIELD, MO 65804
T (417) 877-9600
F (417) 877-9696
CONTACT: JAMES STUFFLEBEAM
E: STUFFLEBEAM@SDAARCHITECTS.COM

CIVIL
COCHRAN
530A E. INDEPENDENCE DRIVE
UNION, MO 63084
CONTACT: DAVE VAN LEER
T (636) 584-0540
F (636) 584-0512
E-MAIL: DVANLEER@COCHRAN.COM

STRUCTURAL
ALPER AUDI, INC.
1804 BORMAN CIRCLE DRIVE
ST. LOUIS, MO 63146
T (314) 432-8600
F (314) 807-2774
CONTACT: STEVE EHRETT
E-MAIL: STEVE.EHRETT@ALPERAUDI.COM

MECHANICAL, ELECTRICAL, PLUMBING
BRIC PARTNERSHIP, LLC
343 S. KIRKWOOD ROAD, SUITE 204
KIRKWOOD, MO 63122
T (314) 725-5889
CONTACT: BRUCE COLEMAN
E: BCOLEMAN@BRICPARTNERSHIP.COM

ENGINEER OF RECORD:

PRELIMINARY
NOT FOR CONSTRUCTION

DAVID E. LAUVER
MO. LICENSE NO. 2007002812
BRIC MO CERTIFICATE OF AUTHORITY 2002028690

No.	Date	Description
	04/14/17	ISSUED FOR BID

DRAWN BY: **DEV**

PROJECT NUMBER: **16-1161.03**

SHEET TITLE:
DETAILS - MECHANICAL

M-801

THE PROFESSIONAL ENGINEER'S SEAL AFFIXED TO THIS SHEET APPLIES ONLY TO THE MATERIAL AND ITEMS SHOWN ON THIS SHEET. ALL DRAWINGS, INSTRUMENTS OR OTHER DOCUMENTS NOT EXHIBITING THIS SEAL SHALL NOT BE CONSIDERED PREPARED BY THIS ENGINEER, AND THIS ENGINEER EXPRESSLY DISCLAIMS ANY AND ALL RESPONSIBILITY FOR SUCH PLAN, DRAWINGS OR DOCUMENTS NOT EXHIBITING THIS SEAL.

PACKAGED AIR HANDLING UNIT

PLAN MARK		MANUFACTURER	MODEL	SUPPLY AIRFLOW CFM	MINIMUM OUTSIDE AIR FLOW CFM	MINIMUM HEATING CFM	EXTERNAL STATIC PRESSURE (IN. WG)	COOLING PERFORMANCE						HEATING PERFORMANCE				REFRIGERANT USED	OPERATING WEIGHT (LBS)	NOTES
								EDB (F°)	EWB (F°)	AMBIENT (F°)	LDB (F°)	DWB (F°)	TOTAL CAPACITY (MBh)	EDB	LDB	INPUT CAP. (MBh)	OUTPUT CAP. (MBh)			
AHU	1	JOHNSON CONTROLS	ZST15N30	6580	1085	2500	1.00	76	65	95	57	56	160.7	40	74	300.0	240.0	R-410A	2100	1 , 2, 3
AHU	2	JOHNSON CONTROLS	ZVTA4N06	1400	510	700	1.00	80	67	95	57	55	48.9	40	72	60.0	49.0	R-410A	1055	1 , 2, 3

NOTES:
1. SEE SHEET E-901 FOR ELECTRICAL REQUIREMENTS.
2. HEATING PERFORMANCE BASED ON FULL FLOW AND MINIMUM OUTSIDE AIRFLOW.
3. PROVIDE WITH INTEGRAL CONTROLS TO PROVIDE SINGLE ZONE VAV FAN OPERATION AS DEFINED BY ASHRAE 90.1 SECTION 6.4.3.10 TO MAINTAIN SPACE TEMPERATURE AND SPACE CO2 SET POINT. SPACE SENSOR SHALL BE 7 DAY PROGRAMMABLE TYPE WITH PASSWORD PROTECTION.
4. PROVIDE STAINLESS STEEL OR COMPOSITE DRAIN PAIN TO MEET ASHRAE 62.1.
5. PROVIDE WITH 14" SEISMIC CURB FOR GRADE MOUNTING OF UNIT.
6. PROVIDE WITH 100% ECONOMIZER WITH POWER EXHAUST AND BAROMETRIC RELIEF KIT.
7. UNIT SHALL BE CONFIGURED FOR HORIZONTAL SUPPLY AND RETURN.
8. PROVIDE WITH SINGLE POINT POWER CONNECTION, DISCONNECT SWITCH, AND CONVENIENCE OUTLET.
9. PROVIDE WITH STAINLESS STEEL OR ALUMINIZED STEEL BURNER.

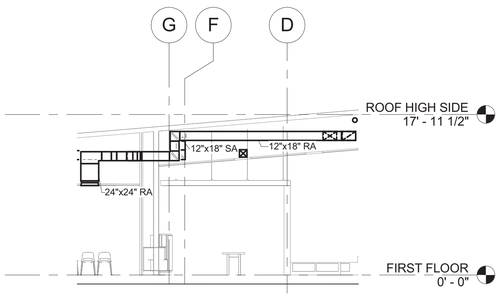

1 M-901 AHU-2 DUCTWORK THROUGH 408 CIRCULATION
1/8" = 1'-0"

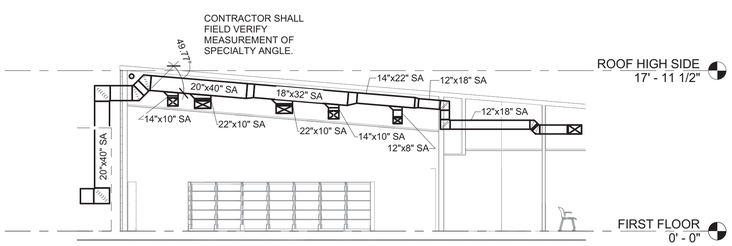

2 M-901 AHU-1 DUCTWORK THROUGH 408 CIRCULATION
1/8" = 1'-0"

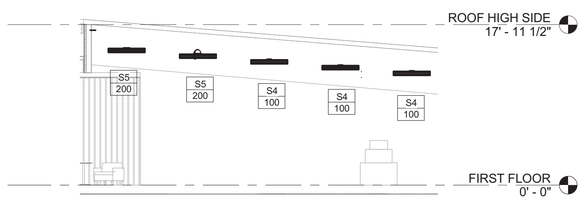

3 M-901 SIDEWALL DIFFUSERS IN CIRCULATION 408
1/8" = 1'-0"

FURNACE SCHEDULE

PLAN MARK		MANUFACTURER	MODEL	SUPPLY FAN			D-X CIRCUITING						GAS HEATING COIL		EAT (°F)	LAT (°F)	WEIGHT (LBS.)	NOTES
				SUPPLY CFM	OUTSIDE AIR CFM	MOTOR H.P	CAP. MBH		EAT		LAT		MBH INPUT	MBH OUTPUT				
							TOTAL	SENS.	DB (°F)	WB (°F)	DB (°F)	WB (°F)						
FC	1	GUARDIAN	RGF19060	1200	120	0.5	34.2	22.9	80	67	62.3	58.1	60	57	60	104	122	1

NOTES:
1. SEE SHEET E-901 FOR ELECTRICAL REQUIREMENTS.

CONDENSING UNIT SCHEDULE

PLAN MARK		MANUFACTURER	MODEL	ASSOCIATED INDOOR UNIT	COOLING CAPACITY (MBh)	REFRIGERANT TYPE	UNIT WEIGHT (LBS)	NOTES
CU	1	GUARDIAN	RAC	FC-1	36.0	R410A	160.00	1

NOTES:
1. SEE SHEET E-901 FOR ELECTRICAL REQUIREMENTS.

AIR DEVICE SCHEDULE

TYPE MARK	MANUFACTURER	MODEL	STYLE	CONNECTION SIZE	FACE		MAXIUMUM AIRFLOW (CFM)	THROW (FT)	MAX NC LEVEL	AIR TERMINAL STATIC PRESSURE (IN-WG)	MATERIAL	FINISH	MOUNTING TYPE	NOTES
					LENGTH	WIDTH								
S1	TITUS	OMNI	SQUARE PLAQUE	6"ø	12"	12"	100	8	30	0.10	STEEL	BWE	SURFACE MOUNT	1
S2	TITUS	OMNI	SQUARE PLAQUE	6"ø	24"	24"	160	7	30	0.10	STEEL	BWE	LAY-IN	1
S3	TITUS	OMNI	SQUARE PLAQUE	8"ø	24"	24"	300	12	30	0.10	STEEL	BWE	LAY-IN	1
S4	TITUS	FL-10	ONE 1" SLOT HIGHTHROW	6"ø	48"	3 3/4"	150	16	20	0.10	STEEL	BWE	LAY-IN OR SURFACE MOUNT	1
S5	TITUS	FL-10	TWO 1" SLOT HIGHTHROW	8"ø	48"	5 5/16"	300	25	30	0.10	STEEL	BWE	LAY-IN OR SURFACE MOUNT	1
R1	TITUS	350RL	GRILL	6"ø	24"	24"	160	-	30	0.10	STEEL	BWE	LAY-IN	1
R2	TITUS	350RL	GRILL	8"ø	24"	24"	280	-	30	0.10	STEEL	BWE	LAY-IN	1
R3	TITUS	350RL	GRILL	22"x22"	24"	24"	1500	-	30	0.10	STEEL	BWE	LAY-IN	1

NOTES:
1. PROVIDE WITH EARTHQUAKE TABS.

LOUVER SCHEDULE

PLAN MARK		MANUFACTURER	MODEL	CFM	DIMENSIONS	FREE AREA (%)	MAX P.D. IN W.C.	MATERIAL	NOTES
LV	1	RUSKIN	ELF6375DX	120	12"x12"	57	0.10	ALUMINUM	1,2

NOTES:
1. COLOR TO BE SELECTED BY ARCHITECT.
2. STYLE: CONTINUOUS DRAINABLE STATIONARY LOUVER, EXTENDED ALUMINUM.

EXHAUST FAN SCHEDULE

PLAN MARK		MANUFACTURER	MODEL	AIRFLOW (CFM)	EXTERNAL STATIC PRESSURE (IN-WC)	FAN RPM	INLET SONES	MOTOR POWER WATTS	NOTES
EF	1	LOREN COOK	GC-162	150	0.12	1200	3.4	98	1
EF	2	LOREN COOK	GC-162	150	0.12	1200	3.4	98	1

NOTES:
1. SEE SHEET E-901 FOR ELECTRICAL REQUIREMENTS.

Scenic Regional Library
read, explore, grow

SCENIC REGIONAL LIBRARY
WRIGHT CITY BRANCH
60 WILDCAT DRIVE
WRIGHT CITY, MO 63390

JEMA
SDA ARCHITECTS

ARCHITECT
JEMA
3005 LOCUST ST.
ST. LOUIS, MO 63103
T (314) 531-7400
CONTACT: SCOTT CLARK
E-MAIL: SCLARK@JEMASTL.COM

ARCHITECT
SAPP DESIGN ASSOCIATES ARCHITECTS
3750 SOUTH FREMONT
SPRINGFIELD, MO 65804
T (417) 877-9600
F (417) 877-9696
CONTACT: JAMES STUFFLEBEAM
E: STUFFLEBEAM@SDAARCHITECTS.COM

CIVIL
COCHRAN
530A E. INDEPENDENCE DRIVE
UNION, MO 63084
CONTACT: DAVE VAN LEER
T (636) 584-0540
F (636) 584-0512
E-MAIL: DVANLEER@COCHRAN.COM

STRUCTURAL
ALPER AUDI, INC.
1804 BORMAN CIRCLE DRIVE
ST. LOUIS, MO 63146
T (314) 432-8600
F (314) 807-2774
CONTACT: STEVE EHRETT
E-MAIL: STEVE.EHRETT@ALPERAUDI.COM

MECHANICAL, ELECTRICAL, PLUMBING
BRIC PARTNERSHIP, LLC
343 S. KIRKWOOD ROAD, SUITE 204
KIRKWOOD, MO 63122
T (314) 725-5889
CONTACT: BRUCE COLEMAN
E: BCOLEMAN@BRICPARTNERSHIP.COM

ENGINEER OF RECORD:

PRELIMINARY
NOT FOR CONSTRUCTION

DAVID E. LAUVER
MO. LICENSE NO. 2007002812
BRIC MO CERTIFICATE OF AUTHORITY 2002028690

No.	Date	Description
	04/12/17	ISSUED FOR BID

DRAWN BY: **AMK**

PROJECT NUMBER: **16-1161.03**

SHEET TITLE:
SCHEDULES & SECTIONS - MECHANICAL

M-901

THE PROFESSIONAL ENGINEER'S SEAL AFFIXED TO THIS SHEET APPLIES ONLY TO THE MATERIAL AND ITEMS SHOWN ON THIS SHEET. ALL DRAWINGS, INSTRUMENTS OR OTHER DOCUMENTS NOT EXHIBITING THIS SEAL SHALL NOT BE CONSIDERED PREPARED BY THIS ENGINEER, AND THIS ENGINEER EXPRESSLY DISCLAIMS ANY AND ALL RESPONSIBILITY FOR SUCH PLAN, DRAWINGS OR DOCUMENTS NOT EXHIBITING THIS SEAL.

PLUMBING GENERAL NOTES - PLUMBING SHEETS ONLY

1. PIPING DRAWINGS ARE TO BE CONSIDERED SCHEMATIC AND ARE NOT INTENDED TO INDICATE ALL CHANGES IN DIRECTION. ALL NECESSARY FITTINGS TO BE FURNISHED AND INSTALLED BY THIS CONTRACTOR. PIPE AND FITTINGS MUST BE INSTALLED SO THAT ALL PIPE AND/OR INSULATION COMPLETELY CLEARS ALL NEARBY STRUCTURES, PIPING AND ITEMS BY OTHER CONTRACTORS.
2. CONTRACTOR SHALL VERIFY EXACT LOCATION, CONDITION, ELEVATION AND SIZES OF UTILITIES AT SITE BEFORE PROCEEDING WITH WORK.
3. PLUMBING CONTRACTOR TO COORDINATE THE INSTALLATION OF ALL PIPING, VALVES, AND EQUIPMENT WITH GENERAL CONTRACTOR AND RELATED STRUCTURAL, MECHANICAL, ELECTRICAL, AND FIRE PROTECTION CONTRACTORS.
4. ALL FIXTURES AND PIPING SHALL BE SIZED, VENTED, TRAPPED AND INSTALLED IN ACCORDANCE WITH INTERNATIONAL PLUMBING CODE 2003 EDITION AND INTERNATIONAL BUILDING CODE 2003 EDITION.
5. CONTRACTOR SHALL PROTECT ALL ADJACENT AREAS DURING ALL PHASES OF CONSTRUCTION.
6. ANY HOLES LEFT IN WALL CONSTRUCTION DUE TO WORK SHALL BE PATCHED AND PAINTED BY THIS CONTRACTOR TO MATCH CONSTRUCTED CONDITIONS. COORDINATE FINISH AND MATERIALS WITH ARCHITECT.
7. PLUMBING CONTRACTOR TO FURNISH AND INSTALL SUPPLY STOP SHUT-OFF VALVES ON ALL FIXTURE WATER SUPPLY LINES. FURNISH AND INSTALL WATER HAMMER ARRESTORS AS INDICATED ON PLANS. INSTALL VALVES IN ACCESSIBLE LOCATION. IF LOCATION IS NOT READILY ACCESSIBLE, COORDINATE ACCESS PANEL REQUIREMENTS WITH GENERAL CONTRACTOR.
8. PLUMBING CONTRACTOR TO FURNISH AND INSTALL SHUT-OFF VALVES AND ACCESS PANELS AT THE BASE OF ALL WATER SUPPLY PIPING RISERS.
9. PLUMBING CONTRACTOR TO PROVIDE CLEANOUT AT THE BASE OR NO MORE THAN 4 FT ABOVE FLOOR OF ALL WASTE, AND SANITARY STACKS.
10. PLUMBING CONTRACTOR SHALL VERIFY THAT ALL VALVES IN THE COLD AND HOT WATER SUPPLY PIPING ARE IN THE FULLY OPEN POSITION. CONTRACTOR TO VERIFY ALL BALANCING VALVES ON HOT WATER CIRCULATING PIPING ARE OPEN AND ADJUSTED AS NOTED TO ASSURE PROPER CIRCULATION.
11. PLUMBING CONTRACTOR TO FURNISH AND INSTALL EQUIPMENT DRAINS FOR ALL APPLIANCES (AIR HANDLERS, WATER HEATERS, KITCHEN EQUIPMENT, (ETC.) AND ROUTE TO THE NEAREST FLOOR DRAIN. PROVIDE INDIRECT CONNECTION AT DRAIN AS REQUIRED. FINAL CONNECTION TO EQUIPMENT SHOULD BE MADE BY CONTRACTOR PROVIDING EQUIPMENT UNLESS OTHERWISE NOTED.
12. WATER TEMPERATURE SETTING FOR WATER HEATER AND THERMOSTATIC MIXING VALVES SHALL BE AS FOLLOWS:
    WATER HEATER - 140 DEG F
    THERMOSTATIC MIXING VALVE - 110 DEG F
13. ALL PIPING SHALL BE CONCEALED IN CHASE, WALLS, CEILING, FLOORING, ETC. UNLESS OTHERWISE NOTED. PIPING SHOWN OUTSIDE OF WALL FOR CLARITY ONLY.
14. REFER TO PLUMBING FIXTURE SCHEDULE FOR WASTE, VENT AND SUPPLY SIZES TO INDIVIDUAL FIXTURES.
15. EQUIPMENT AND FIXTURE SYMBOLOGY MAY NOT REFLECT ACTUAL TYPE. REFER TO SPECIFICATIONS AND SCHEDULES FOR FIXTURE OR EQUIPMENT TYPE.
16. FIRE CAULK ALL PIPING PENETRATIONS THROUGH FIRE RATED PARTITIONS TO MAINTAIN FIRE RATING OF PARTITION. CONTRACTOR TO FIRESTOP ALL PENETRATIONS THROUGH FIRE-RATED FLOORS AND WALLS CREATED BY NEW WORK WITH "SPECSEAL SSS" OR EQUAL.
17. PLUMBING CONTRACTOR SHALL FURNISH AND INSTALL CONCRETE EQUIPMENT PAD FOR ALL EQUIPMENT SUPPLIED BY THIS CONTRACTOR. PAD SHOULD BE A MINIMUM OF 4" THICK.
18. ALL ITEMS INCLUDED ON THESE DRAWINGS AND THE SPECIFICATIONS SHALL BE INCLUDED IN THE CONTRACTOR'S BID. ANY ITEMS THAT ARE UNCLEAR OR FOUND TO BE INCORRECT BY THE CONTRACTOR SHALL BE BROUGHT, IN WRITING, TO THE ATTENTION OF THE ARCHITECT AND ENGINEER PRIOR TO THE BID DUE DATE.
19. CAULK ALL PIPING PENETRATIONS THROUGH WALLS TO MINIMIZE SOUND PENETRATION THROUGH WALLS.
20. INVERT ELEVATIONS ARE BASED ON FIRST FLOOR LEVEL BEING SET AT 100'-0".
21. LOCATIONS OF ROOF DRAINS, FLOOR DRAINS, FLOOR SINKS, TRENCH DRAINS, ETC. INDICATED ON THESE DRAWINGS ARE CONSIDERED APPROXIMATE. THIS CONTRACTOR SHALL BE RESPONSIBLE FOR COORDINATION OF FINAL AND EXACT LOCATIONS WITH ALL OTHER TRADES AND EQUIPMENT SUPPLIERS PRIOR TO INSTALLATION. DRAINS, ETC., NOT CORRECTLY LOCATED AS DETERMINED BY THE ARCHITECT/ENGINEER/OWNER SHALL BE REMOVED AND RELOCATED AT THIS CONTRACTOR'S EXPENSE.
22. ALL VTR'S SHALL BE LOCATED A MINIMUM OF 12'-0" FROM AIR INTAKES ON MECHANICAL ROOFTOP EQUIPMENT. COORDINATE WITH ALL TRADES PRIOR TO INSTALLATION.
23. AREA ABOVE CEILINGS SERVE AS A RETURN AIR PLENUM. ALL MATERIALS EXPOSED IN THE PLENUM SHALL HAVE A 25/50 SMOKE/FLAME SPREAD RATING. NO PVC PIPING ALLOWED ABOVE CEILING. ALL SANITARY AND VENT PIPING TO BE CAST IRON ABOVE CEILING. ALL GAS PIPING ABOVE CEILING TO BE STEEL WITH WELDED JOINTS. ALL POLYPROPYPLENE WATER PIPING ABOVE CEILING SHALL BE WRAPPED TO ACHIEVE 25/50 SMOKE/FLAME SPREAD RATING.
24. MAKE ALL FINAL PLUMBING CONNECTIONS TO PLUMBING FIXTURES AND EQUIPMENT SHOWN ON PLANS.
25. EXCAVATION, BEDDING AND BACKFILL ASSOCIATED WITH BELOW SLAB PIPING INSTALLATION SHALL BE CONSIDERED PART OF THE PLUMBING CONTRACTOR'S WORK.
26. STARTING ELEVATION FOR SANITARY SEWER PIPING TO BE NOT LESS THAN 1'-6" BELOW FINISHED FLOOR UNLESS NOTED OTHERWISE.
27. ALL PLUMBING PIPING IN FINISHED ROOMS, OPEN TO STRUCTURE SHALL BE PAINTED TO MATCH STRUCTURE. DOMESTIC WATER PIPING SHALL BE PAINTED WITH PAINT THAT HAS ELASTOMERIC PROPERTIES, SUITABLE FOR PAINTING PLASTIC MATERIALS. FOLLOW PAINT MANUFACTURER'S INSTRUCTIONS FOR PIPE SURFACE PREPARATION AND PAINT APPLICATION.

PLUMBING FIXTURE SCHEDULE (BASIS OF DESIGN)

MARK	DESCRIPTION	MANUFACTURER	MODEL NUMBER	WASTE	VENT	COLD WATER	HOT WATER	NOTES
WC-1	WATER CLOSET, FLOOR MOUNT	KOHLER	K-4405	4"	2"	-	-	ADA COMPLIANT, FLOOR MOUNT, FLOOR DISCHARGE
	FLUSH VALVE	SLOAN	WES-111-W	-	-	1-1/4"	-	1.1 TO 1.6 gpf DUAL FLUSH MANUAL FLUSHOMETER
LA-1	LAVATORY (WALL HUNG)	KOHLER	K-2005	1-1/2"	1-1/2"	-	-	WALL HUNG, ADA COMPLIANT, PROVIDE CARRIER
	FAUCET	CHICAGO FAUCETS	895-317CP	-	-	1/2"	1/2"	ADA COMPLIANT LEVER HANDLES
SK-1	SINK	ELKAY	LR1919	1-1/2"	1-1/2"			SINGLE BASIN, SS SINK
	FAUCET	CHICAGO FAUCETS	895-317GN8AE29VPCP	-	-	1/2"	1/2"	2.2 GPM, WRIST BLADE PADDLES, 8" GOOSENECK
WH-1	HOSE BIBB	WOODFORD	24	-	-	1/2"	-	INTERIOR, ANTI-SIPHON WALL HYDRANT
OB-1	OUTLET BOX	OATEY	39140	-	-	1/2"	-	
TMV-1	THERMOSTATIC MIXING VALVE	LEONARD	TM-420 B-LF-DT	-	-	3/4"	3/4"	SET TO 110 DEGREE OUTLET TEMP.
MSB-1	MOP SINK BASIN	FIAT	TSB3003	2"	1-1/2"	-	-	24" X 36" FLOOR SET, SS CAPS
	MOP SINK FAUCET	FIAT	830-AA	-	-	1/2"	1/2"	-
EWC-1	ELECTRIC WATER COOLER	ELKAY	EZH20	1-1/2"	1"	1/2"	-	BI-LEVEL ADA COOLER WITH BOTTLE FILLER
GD-1	GARBAGE DISPOSAL	INSINKERATOR	EVOLUTION	-	-	-	-	INSTALL BELOW COUNTER
OB-1	OUTLET BOX	SIOUX CHEIF	696-G1010MF	-	-	-	-	REFRIGERATOR/ICEMAKER OUTLET BOX; WITH ARRESTORS

NOTES

DRAIN SCHEDULE (BASIS OF DESIGN)

MARK	MANUFACTURER	MODEL #	GRATE	BODY	STRAINER	NOTES
FD-1	JAY R. SMITH	2110	NB	CI	SS	PROVIDE WITH TRAP GUARD TRAP SEAL, SURESEAL OR ENGINEER APPROVED EQUAL.
FCO	SIOUX CHIEF	834-64DNR	N/A	DUCTILE IRON	N/A	NICKLE BRONZE ROUND COVER PLATE.

NOTES
NB NICKEL BRONZE
SS STAINLESS STEEL
CI CAST IRON
\- INDICATES NOT APPLICABLE

ELECTRIC WATER HEATER SCHEDULE

MARK	MANUFACTURER	MODEL NO.	STORAGE	OUTLET TEMPERATURE ° F	RECOVERY AT 100° F RISE	INPUT	NOTES
EWH-1	A.O. SMITH	DEL-10D-4.5	10 GAL	140	18 GAL	4.5 KW	

PLUMBING SYMBOLS AND ABBREVIATIONS

SYMBOL	DESCRIPTION
	DIRECTION OF FLOW OR SLOPE
	DOMESTIC COLD WATER (CW)
	DOMESTIC HOT WATER (HW)
	HOT WATER CIRCULATING (HWC)
S	SANITARY SEWER (S)
S	SANITARY SEWER BELOW SLAB (S)
	VENT (V)
ST	STORM SEWER BELOW SLAB (ST)
G	NATURAL GAS (G)
	RISE OR UP
	DROP OR DOWN
	BRANCH CONNECTION - TOP
	BRANCH CONNECTION - BOTTOM
	CLEANOUT
	CAP / PLUG
	FIXTURE TRAP
	VALVE
	CHECK VALVE
	STRAINER
	UNION
	GAS VALVE
	PRESSURE REGULATOR - GAS
M	METER
	DOMESTIC CIRCULATING PUMP (DCP)
	PRESSURE/TEMPERATURE RELIEF VALVE
	DOUBLE CHECK BACKFLOW PREVENTER (BFP)
	FLOOR DRAIN (FD)
	FLOOR CLEANOUT (FCO)
1	KEYED NOTE
XXX 1	MISCELLANEOUS EQUIPMENT TAG
ADA	AMERICANS WITH DISABILITIES ACT
BTC	BRANCH TO CONNECTION
CFH	CUBIC FEET PER HOUR
CI	CAST IRON
CO	CLEANOUT
DN	DOWN
DP	DROP
DS	DOWNSPOUT
DWV	DRAIN WASTE VENT
EWC	ELECTRIC WATER COOLER
EXIST.	EXISTING
FCO	FLOOR CLEANOUT
FLA	FULL LOAD AMPS
GPH	GALLONS PER HOUR
GPM	GALLONS PER MINUTE
I.E. OR INV. ELEV.	INVERT ELEVATION
LA	LAVATORY
MB	MOP BASIN
M.C.	MECHANICAL CONTRACTOR
N.C.	NORMALLY CLOSED
ODN	OVERFLOW DOWN SPOUT NOZZLE
ODS	OVERFLOW DOWN SPOUT
P.C.	PLUMBING CONTRACTOR
SK	SINK
SQ. FT.	SQUARE FEET
SS	SANITARY STACK
TMV	THERMOSTATIC MIXING VALVE
TYP	TYPICAL
UR	URINAL
VS	VENT STACK
VTR	VENT THRU ROOF
WC	WATER CLOSET
WCO	WALL CLEANOUT
WH	WALL HYDRANT
WHA	WATER HAMMER ARRESTOR
YCO	YARD CLEAN OUT

*NOTE: NOT ALL SYMBOLS/ABBREVIATIONS USED FOR THIS PROJECT.

Scenic Regional Library
read, explore, grow

SCENIC REGIONAL LIBRARY
WRIGHT CITY BRANCH
60 WILDCAT DRIVE
WRIGHT CITY, MO 63390

JEMA
SDA ARCHITECTS

ARCHITECT
JEMA
3005 LOCUST ST.
ST. LOUIS, MO 63103
T (314) 531-7400
CONTACT: SCOTT CLARK
E-MAIL: SCLARK@JEMASTL.COM

ARCHITECT
SAPP DESIGN ASSOCIATES ARCHITECTS
3750 SOUTH FREMONT
SPRINGFIELD, MO 65804
T (417) 877-9600
F (417) 877-9696
CONTACT: JAMES STUFFLEBEAM
E: STUFFLEBEAM@SDAARCHITECTS.COM

CIVIL
COCHRAN
530A E. INDEPENDENCE DRIVE
UNION, MO 63084
CONTACT: DAVE VAN LEER
T (636) 584-0540
F (636) 584-0512
E-MAIL: DVANLEER@COCHRAN.COM

STRUCTURAL
ALPER AUDI, INC.
1804 BORMAN CIRCLE DRIVE
ST. LOUIS, MO 63146
T (314) 432-8600
F (314) 807-2774
CONTACT: STEVE EHRETT
E-MAIL: STEVE.EHRETT@ALPERAUDI.COM

MECHANICAL, ELECTRICAL, PLUMBING
BRIC PARTNERSHIP, LLC
343 S. KIRKWOOD ROAD, SUITE 204
KIRKWOOD, MO 63122
T (314) 725-5889
CONTACT: BRUCE COLEMAN
E: BCOLEMAN@BRICPARTNERSHIP.COM

ENGINEER OF RECORD:

PRELIMINARY
NOT FOR CONSTRUCTION

DAVID E. LAUVER
MO. LICENSE NO. 2007002812
BRIC MO CERTIFICATE OF AUTHORITY 2002028690

No.	Date	Description
	04/14/17	ISSUED FOR BID

DRAWN BY: **DEV**

PROJECT NUMBER: **16-1161.03**

SHEET TITLE:
LEGEND, SYMBOLS, NOTES, ABBREVIATIONS, & SCHEDULES - PLUMBING

P-001

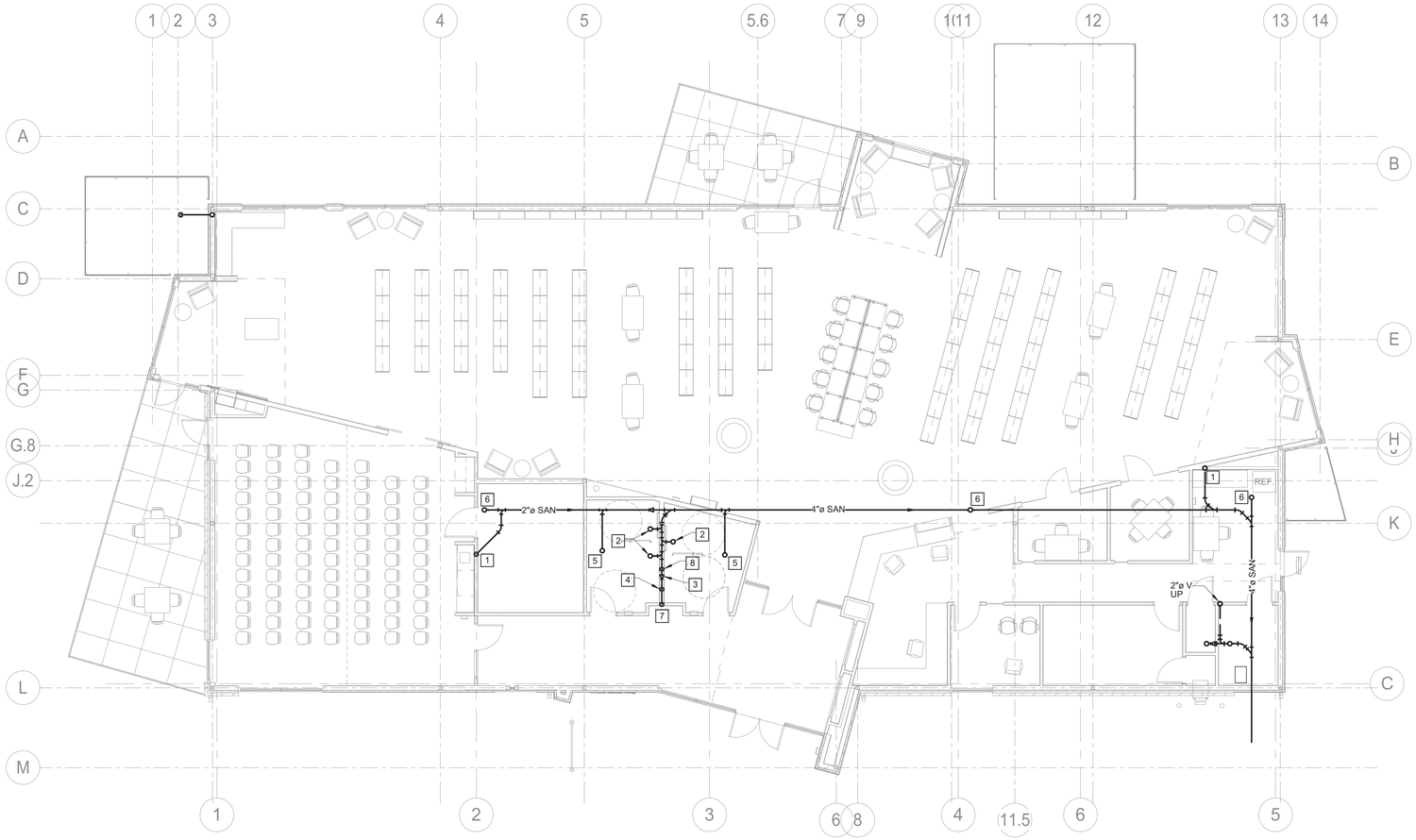

1 P-200 FLOOR PLAN - FOUNDATION - PLUMBING
1/8" = 1'-0"

THE PROFESSIONAL ENGINEER'S SEAL AFFIXED TO THIS SHEET APPLIES ONLY TO THE MATERIAL AND ITEMS SHOWN ON THIS SHEET. ALL DRAWINGS, INSTRUMENTS OR OTHER DOCUMENTS NOT EXHIBITING THIS SEAL SHALL NOT BE CONSIDERED PREPARED BY THIS ENGINEER, AND THIS ENGINEER EXPRESSLY DISCLAIMS ANY AND ALL RESPONSIBILITY FOR SUCH PLAN, DRAWINGS OR DOCUMENTS NOT EXHIBITING THIS SEAL.

GENERAL NOTES

1 SEE SHEET P-001 FOR GENERAL NOTES THAT APPLY TO THIS SHEET.

KEYED NOTES

#	
1	2" SANITARY UP TO SK-1.
2	4" SANITARY UP TO WC-1
3	CONNECT 2" SANITARY TO 4" SANITARY FROM WC-1.
4	2" SANITARY UP TO TWO LAV-1.
5	4" SANITARY UP TO FD-1.
6	2" SANITARY UP TO FCO.
7	2" SANITARY UP TO EWC-1.
8	2" SANITARY UP TO UR-1.

Scenic Regional Library
read, explore, grow

SCENIC REGIONAL LIBRARY
WRIGHT CITY BRANCH
60 WILDCAT DRIVE
WRIGHT CITY, MO 63390

ARCHITECT
JEMA
3005 LOCUST ST.
ST. LOUIS, MO 63103
T (314) 531-7400
CONTACT: SCOTT CLARK
E-MAIL: SCLARK@JEMASTL.COM

ARCHITECT
SAPP DESIGN ASSOCIATES ARCHITECTS
3750 SOUTH FREMONT
SPRINGFIELD, MO 65804
T (417) 877-9600
F (417) 877-9696
CONTACT: JAMES STUFFLEBEAM
E: STUFFLEBEAM@SDAARCHITECTS.COM

CIVIL
COCHRAN
530A E. INDEPENDENCE DRIVE
UNION, MO 63084
CONTACT: DAVE VAN LEER
T (636) 584-0540
F (636) 584-0512
E-MAIL: DVANLEER@COCHRAN.COM

STRUCTURAL
ALPER AUDI, INC.
1804 BORMAN CIRCLE DRIVE
ST. LOUIS, MO 63146
T (314) 432-8600
F (314) 807-2774
CONTACT: STEVE EHRETT
E-MAIL: STEVE.EHRETT@ALPERAUDI.COM

MECHANICAL, ELECTRICAL, PLUMBING
BRIC PARTNERSHIP, LLC
343 S. KIRKWOOD ROAD, SUITE 204
KIRKWOOD, MO 63122
T (314) 725-5889
CONTACT: BRUCE COLEMAN
E: BCOLEMAN@BRICPARTNERSHIP.COM

ENGINEER OF RECORD:

PRELIMINARY
NOT FOR CONSTRUCTION

DAVID E. LAUVER
MO. LICENSE NO. 2007002812
BRIC MO CERTIFICATE OF AUTHORITY 2002028690

No.	Date	Description
	04/14/17	ISSUED FOR BID

DRAWN BY: **DEV**

PROJECT NUMBER: **16-1161.03**

SHEET TITLE:
FLOOR PLAN - FOUNDATION - PLUMBING

P-200

THE PROFESSIONAL ENGINEER'S SEAL AFFIXED TO THIS SHEET APPLIES ONLY TO THE MATERIAL AND ITEMS SHOWN ON THIS SHEET. ALL DRAWINGS, INSTRUMENTS OR OTHER DOCUMENTS NOT EXHIBITING THIS SEAL SHALL NOT BE CONSIDERED PREPARED BY THIS ENGINEER, AND THIS ENGINEER EXPRESSLY DISCLAIMS ANY AND ALL RESPONSIBILITY FOR SUCH PLAN, DRAWINGS OR DOCUMENTS NOT EXHIBITING THIS SEAL.

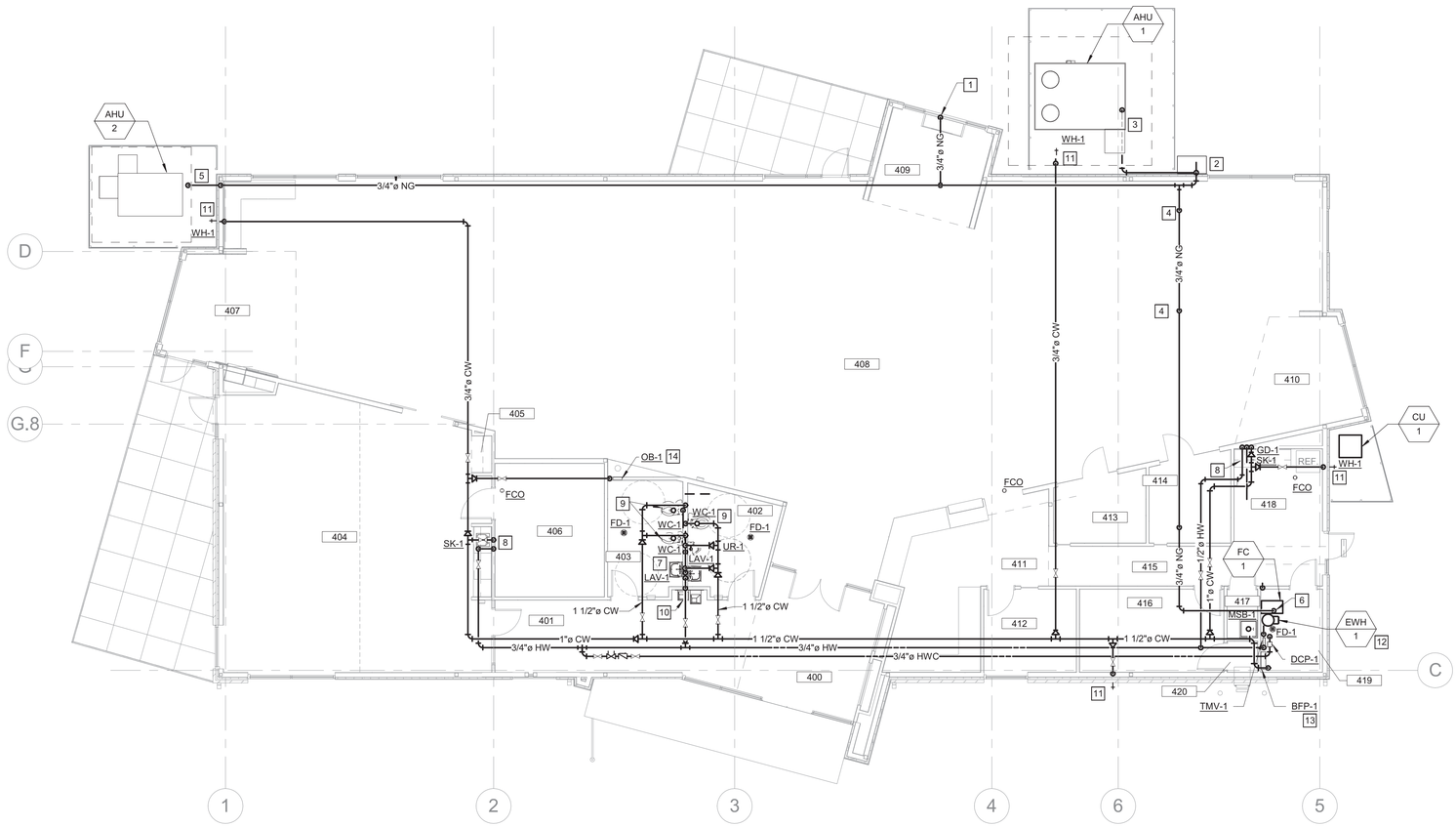

1 P-201 FLOOR PLAN - FIRST FLOOR - PLUMBING
1/8" = 1'-0"

GENERAL NOTES

1 SEE SHEET P-001 FOR GENERAL NOTES THAT APPLY TO THIS SHEET.

KEYED NOTES

#	
1	3/4" NG DOWN TO FIREPLACE. ROUTE IN WALL. COORDINATE EXACT LOCATION WITH FIREPLACE CONNECTION.
2	LOCATION OF GAS METER. SEE DETAIL FOR ADDITIONAL REQUIREMENTS.
3	CONNECT 3/4" NG TO AHU-1. PENETRATE WALL 18" AFF. ROUTE TO AHU-2. SUPPORT PIPING ON GROUND.
4	DROP PIPING THROUGHOUT CIRCULATION TO COORDINATE WITH ROOF AND CEILING SLOPE.
5	3/4" NG DOWN THROUGH WALL. PENETRATE WALL 18" AFF. ROUTE TO AHU-2. SUPPORT PIPING ON GROUND.
6	3/4" NG DOWN TO FC-1.
7	1/2" CW AND HW DOWN TO AND 1 1/2" VENT UP FROM TWO LAV-1.
8	1/2" CW AND HW DOWN, AND 1 1/2" VENT UP FROM SK-1.
9	1 1/4" CW DOWN AND 2" VENT UP FROM WC-1.
10	1/2" CW AND HW, AND 1 1/2" VENT UP FROM EWC-1.
11	3/4" CW DOWN TO WH-1. MOUNT WH-1 18" ABOVE GRADE.
12	SEE DETAIL FOR EWH-1 PIPING REQUIREMENTS.
13	REFER TO DETAIL ON SHEET P-801 FOR ADDITIONAL REQUIREMENTS.
14	1/2" CW DOWN TO OB-1. INSTALL OB-1 UNDER COUNTER.

ROOM SCHEDULE

Number	Name
100	CIRCULATION
400	VESTIBULE
401	CORRIDOR
402	MENS
403	WOMENS
404	MEETING ROOM
405	COATS
406	STORAGE
407	CHILDREN AREA
408	CIRCULATION
409	ADULT AREA
410	TEEN AREA
411	WORK ROOM
412	OFFICE
413	STUDY
414	STUDY
415	CORRIDOR
416	STORAGE
417	JANITORS CLOSET
418	BREAK ROOM
419	MECH / ELEC
420	BOOK DROP

Scenic Regional Library
read, explore, grow

SCENIC REGIONAL LIBRARY
WRIGHT CITY BRANCH
60 WILDCAT DRIVE
WRIGHT CITY, MO 63390

JEMA
SDA ARCHITECTS

ARCHITECT
JEMA
3005 LOCUST ST.
ST. LOUIS, MO 63103
T (314) 531-7400
CONTACT: SCOTT CLARK
E-MAIL: SCLARK@JEMASTL.COM

ARCHITECT
SAPP DESIGN ASSOCIATES ARCHITECTS
3750 SOUTH FREMONT
SPRINGFIELD, MO 65804
T (417) 877-9600
F (417) 877-9696
CONTACT: JAMES STUFFLEBEAM
E: STUFFLEBEAM@SDAARCHITECTS.COM

CIVIL
COCHRAN
530A E. INDEPENDENCE DRIVE
UNION, MO 63084
CONTACT: DAVE VAN LEER
T (636) 584-0540
F (636) 584-0512
E-MAIL: DVANLEER@COCHRAN.COM

STRUCTURAL
ALPER AUDI, INC.
1804 BORMAN CIRCLE DRIVE
ST. LOUIS, MO 63146
T (314) 432-8600
F (314) 807-2774
CONTACT: STEVE EHRETT
E-MAIL: STEVE.EHRETT@ALPERAUDI.COM

MECHANICAL, ELECTRICAL, PLUMBING
BRIC PARTNERSHIP, LLC
343 S. KIRKWOOD ROAD, SUITE 204
KIRKWOOD, MO 63122
T (314) 725-5889
CONTACT: BRUCE COLEMAN
E: BCOLEMAN@BRICPARTNERSHIP.COM

ENGINEER OF RECORD:

PRELIMINARY
NOT FOR CONSTRUCTION

DAVID E. LAUVER
MO. LICENSE NO. 2007002812
BRIC MO CERTIFICATE OF AUTHORITY 2002028690

No.	Date	Description
	04/14/17	ISSUED FOR BID

DRAWN BY: **DEV**

PROJECT NUMBER: **16-1161.03**

SHEET TITLE:
FLOOR PLAN - FIRST FLOOR - PLUMBING

P-201

THE PROFESSIONAL ENGINEER'S SEAL AFFIXED TO THIS SHEET APPLIES ONLY TO THE MATERIAL AND ITEMS SHOWN ON THIS SHEET. ALL DRAWINGS, INSTRUMENTS OR OTHER DOCUMENTS NOT EXHIBITING THIS SEAL SHALL NOT BE CONSIDERED PREPARED BY THIS ENGINEER, AND THIS ENGINEER EXPRESSLY DISCLAIMS ANY AND ALL RESPONSIBILITY FOR SUCH PLAN, DRAWINGS OR DOCUMENTS NOT EXHIBITING THIS SEAL.

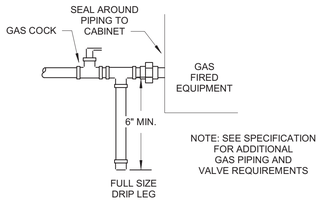

1 P-801 GAS PIPING DETAIL
N.T.S.

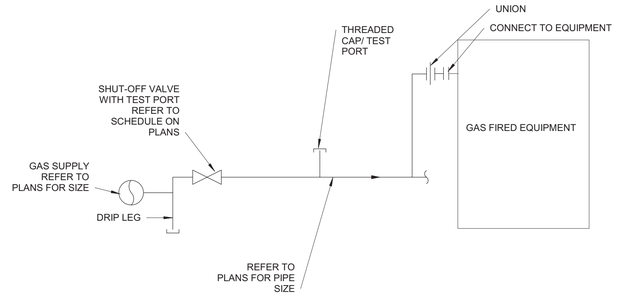

2 P-801 TYPICAL GAS CONNECTION TO EQUIPMENT SCHEMATIC
N.T.S.

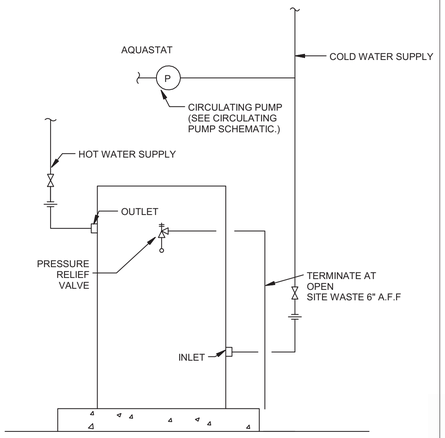

3 P-801 ELECTRIC WATER HEATER SCHEMATIC
N.T.S.

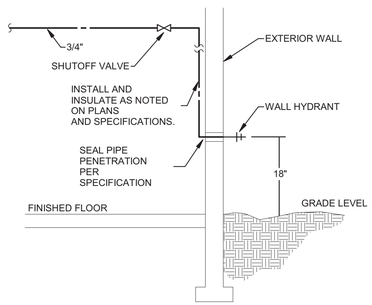

GENERAL NOTES:
1. CONTRACTORS SHALL COORDINATE LOCATION OF SHUT-OFF VALVE TO ENSURE ACCESSIBILITY.

4 P-801 WALL HYDRANT
N.T.S.

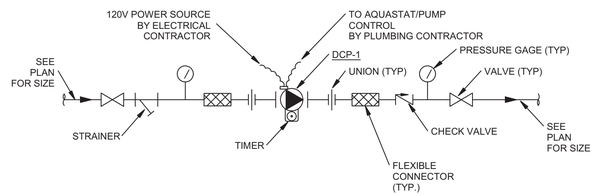

5 P-801 DOMESTIC CIRCULATING PUMP SCHEMATIC
N.T.S.

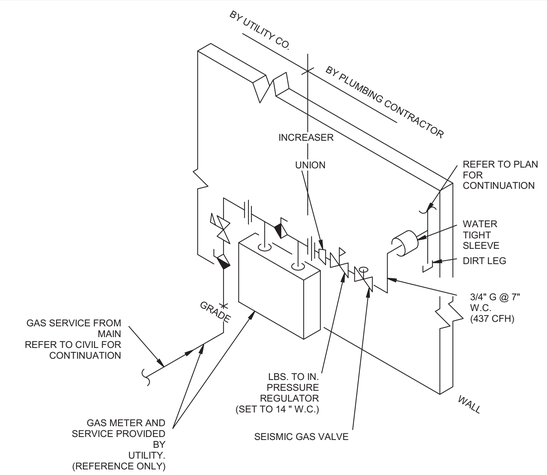

6 P-801 GAS SERVICE ENTRANCE SCHEMATIC
N.T.S.

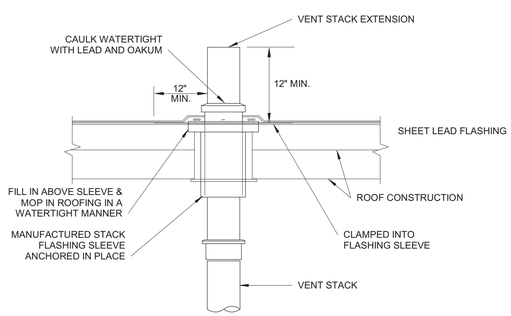

7 P-801 VENT THROUGH ROOF SCHEMATIC
N.T.S.

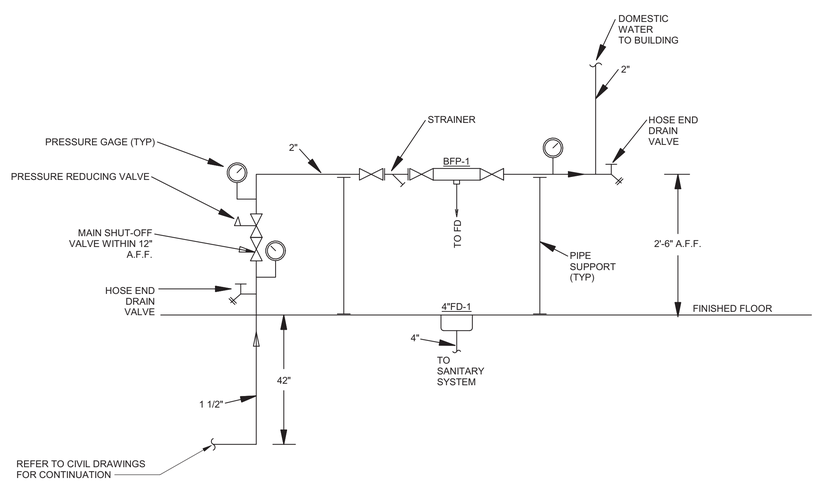

8 P-801 BACKFLOW PREVENTER/WATER SERVICE SCHEMATIC
N.T.S.

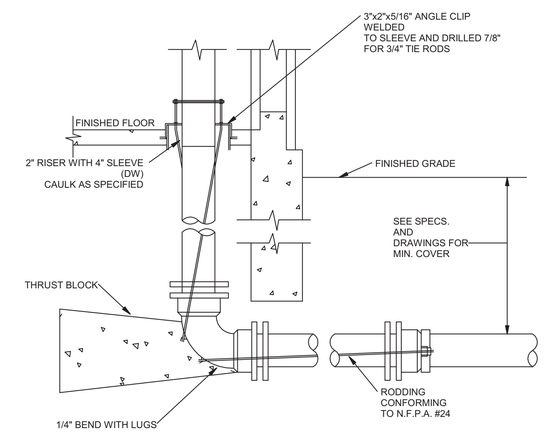

9 P-801 WATER SERVICE ENTRANCE SCHEMATIC
N.T.S.

Scenic Regional Library
read, explore, grow

SCENIC REGIONAL LIBRARY
WRIGHT CITY BRANCH
60 WILDCAT DRIVE
WRIGHT CITY, MO 63390

JEMA
SDA ARCHITECTS

ARCHITECT
JEMA
3005 LOCUST ST.
ST. LOUIS, MO 63103
T (314) 531-7400
CONTACT: SCOTT CLARK
E-MAIL: SCLARK@JEMASTL.COM

ARCHITECT
SAPP DESIGN ASSOCIATES ARCHITECTS
3750 SOUTH FREMONT
SPRINGFIELD, MO 65804
T (417) 877-9600
F (417) 877-9696
CONTACT: JAMES STUFFLEBEAM
E: STUFFLEBEAM@SDAARCHITECTS.COM

CIVIL
COCHRAN
530A E. INDEPENDENCE DRIVE
UNION, MO 63084
CONTACT: DAVE VAN LEER
T (636) 584-0540
F (636) 584-0512
E-MAIL: DVANLEER@COCHRAN.COM

STRUCTURAL
ALPER AUDI, INC.
1804 BORMAN CIRCLE DRIVE
ST. LOUIS, MO 63146
T (314) 432-8600
F (314) 807-2774
CONTACT: STEVE EHRETT
E-MAIL: STEVE.EHRETT@ALPERAUDI.COM

MECHANICAL, ELECTRICAL, PLUMBING
BRIC PARTNERSHIP, LLC
343 S. KIRKWOOD ROAD, SUITE 204
KIRKWOOD, MO 63122
T (314) 725-5889
CONTACT: BRUCE COLEMAN
E: BCOLEMAN@BRICPARTNERSHIP.COM

ENGINEER OF RECORD:

PRELIMINARY
NOT FOR CONSTRUCTION

DAVID E. LAUVER
MO. LICENSE NO. 2007002812
BRIC MO CERTIFICATE OF AUTHORITY 2002028690

No.	Date	Description
	04/14/17	ISSUED FOR BID

DRAWN BY: **DEV**

PROJECT NUMBER: **16-1161.03**

SHEET TITLE:
DETAILS - PLUMBING

P-801

THE PROFESSIONAL ENGINEER'S SEAL AFFIXED TO THIS SHEET APPLIES ONLY TO THE MATERIAL AND ITEMS SHOWN ON THIS SHEET. ALL DRAWINGS, INSTRUMENTS OR OTHER DOCUMENTS NOT EXHIBITING THIS SEAL SHALL NOT BE CONSIDERED PREPARED BY THIS ENGINEER, AND THIS ENGINEER EXPRESSLY DISCLAIMS ANY AND ALL RESPONSIBILITY FOR SUCH PLAN, DRAWINGS OR DOCUMENTS NOT EXHIBITING THIS SEAL.

ELECTRICAL ABBREVIATIONS:

A.F.	AMP FUSE. USED IN CONJUNCTION WITH "A.S."
A.F.F.	ABOVE FINISHED FLOOR.
A.S.	AMP SWITCH USED IN CONJUNCTION WITH "A.F." OR "N.F."
C	IN STATEMENT IS ABBREVIATION FOR "CONDUIT."
CAFCI	COMBINATION ARC FAULT CIRCUIT INTERRUPTER BREAKER.
CKT	CIRCUIT.
CLG	INSTALL DEVICE EITHER AT OR 12" BELOW FINISHED CEILING.
E.C.	ELECTRICAL CONTRACTOR (DIVISION 16)
E.M.	EQUIPMENT MANUFACTURER.
ETR	EXISTING TO REMAIN.
EX	INDICATES DEVICE IS EXISTING.
F.B.O.	FURNISHED BY OTHERS
FS	FUSIBLE SWITCH.
GD	GARAGE DOOR INSTALLER.
GFI	GROUND FAULT INTERRUPT PROTECTION.
HP	HORSEPOWER
IG	ISOLATED / INSOLATED GROUND DEVICE.
LVC	LOW VOLTAGE CONTRACTOR
M.C.	MECHANICAL CONTRACTOR (DIVISION 15).
NF	NOT FUSED / NON-FUSIBLE SWITCH.
NIC	NOT IN CONTRACT.
OC	6" OVER (ABOVE) COUNTER LEVEL.
P.C.	PLUMBING CONTRACTOR (DIVISION 15).
REL	RELAY.
TV	TELEVISION
U.N.O.	UNLESS NOTED OTHERWISE.
UCR	UNDER COUNTER REFRIGERATOR.
UPS	UNINTERRUPTIBLE POWER SUPPLY.
VFD	VARIABLE FREQUENCY DRIVE.
W	WALL MOUNTED DEVICE (48" A.F.F.)
WP	WEATHERPROOF IN-USE COVER.

ELECTRICAL INSTALLATION NOTES:

1. THE COMPLETE INSTALLATION SHALL BE IN ACCORDANCE WITH THE ADAAG (AMERICANS WITH DISABILITIES ACT ACCESSIBILITY GUIDELINES).
2. CIRCUIT NUMBERS ARE SHOWN FOR CIRCUIT IDENTIFICATION. CIRCUITING SHALL AGREE WITH NUMBERING ON THE PANEL PROVIDED. COMMON NEUTRALS MAY BE USED FOR BRANCH CIRCUITS. BALANCE THE LOAD ON PANEL AS EVENLY AS POSSIBLE BETWEEN EACH PHASE.
3. CONCEAL ALL CONDUIT IN WALLS, PARTITIONS, ABOVE CEILING, AND IN FLOOR SLAB, ETC. UNLESS OTHERWISE INDICATED ON THE PLANS OR IN THE SPECIFICATIONS. CONDUIT IN MECHANICAL ROOMS, AND STORAGE ROOMS WITHOUT CEILINGS MAY BE EXPOSED ON BUILDING STRUCTURE.
4. BOXES LOCATED ON OPPOSITE SIDE OF NON-RATED WALLS SHALL BE OFFSET A MINIMUM OF 6" HORIZONTALLY. BOXES ON OPPOSITE SIDES OF FIRE RATED WALLS SHALL BE OFFSET A MINIMUM OF 24" HORIZONTALLY. "THRU-THE-WALL" BOXES SHALL NOT BE ALLOWED WITHOUT PRIOR WRITTEN APPROVAL OF THE ARCHITECT / ENGINEER.
5. CONTRACTOR SHALL COORDINATE THE LOCATION OF ALL DETECTORS AND . OR SPEAKERS WITH LUMINARIES, SPRINKLER, AND CEILING DIFFUSERS. CENTER ALL DEVICES IN CEILING TILE PATTERN. SMOKE DETECTORS SHALL BE LOCATED NO CLOSER THAN 3 FEET TO AN AIR SUPPLY DIFFUSER OR RETURN GRILLE.
6. CONTRACTOR SHALL VERIFY ALL FURNITURE, MODULAR FURNITURE, AND EQUIPMENT LOCATIONS WITH ARCHITECTURAL PLANS, ELEVATIONS AND REVIEW SHOP DRAWINGS. PRIOR TO MAKING THE ACTUAL ELECTRICAL INSTALLATION THIS CONTRACTOR SHALL ADJUST RECEPTACLES, OUTLETS, OR CONNECTION LOCATIONS TO ACCOMMODATE FURNITURE AND / OR EQUIPMENT.
7. WALL MOUNTED DEVICES (STROBES, PULL STATIONS, SPEAKERS, SENSORS, RECEPTACLES, LIGHT SWITCHES, ETC.) THAT ARE LOCATED WITHIN +/- 2' HORIZONTALLY OFF A LOWER DEVICE(S), ALL DEVICES SHALL BE ALIGNED VERTICALLY AND RACEWAYS ROUTED AS REQUIRED TO ALLOW THE DEVICES TO BE MOUNTED VERTICALLY.
8. ELECTRICAL EQUIPMENT SHALL BE MOUNTED TO AVOID THE IMPEDANCE OF OPERATION AND / OR ACCESS TO ELECTRICAL AND MECHANICAL EQUIPMENT. ALL MOUNTING OF ELECTRICAL GEAR ON EQUIPMENT SUPPLIED BY ANOTHER CONTRACTOR SHALL BE APPROVED IN ADVANCE BY THE OTHER CONTRACTOR.
9. TELECOMMUNICATIONS EQUIPMENT SHALL BE MOUNTED TO ALLOW ACCESS TO ELECTRICAL AND MECHANICAL EQUIPMENT. ALL MOUNTING OF TELECOMMUNICATION DEVICES ON EQUIPMENT SUPPLIED BY ANOTHER CONTRACTOR SHALL BE APPROVED IN ADVANCE BY THE OTHER CONTRACTOR.
10. ALL FINAL ELECTRICAL CONNECTIONS TO MOTORS SHALL BE MADE WITH FLEXIBLE METAL CONDUIT. USE LIQUIDTIGHT CONDUIT AND FITTING WHERE SUBJECT TO MOISTURE. ROUTE GROUND WIRE FROM CIRCUIT GROUND TO MOTOR GROUND THROUGH FLEXIBLE CONDUIT. FLEXIBLE CONDUIT SHALL NOT EXCEED 6' IN LENGTH.
11. CONTRACTOR SHALL BE RESPONSIBLE FOR ALL OPENINGS REQUIRED IN WALLS. ALL OPENINGS SHALL BE REPAIRED TO MATCH EXISTING BY A QUALIFIED CONTRACTOR AT THE EXPENSE OF THIS CONTRACTOR. ALL CONDUITS THROUGH WALLS SHALL BE GROUTED OR SEALED INTO OPENINGS.
12. ALL MATERIALS USED TO SEAL PENETRATIONS OF FIRE RATED WALLS AND FLOOR SHALL BE TESTED AND CERTIFIED AS A SYSTEM PER ASTM E814 STANDARDS FOR FIRE TESTS OF THROUGH-PENETRATION FIRESTOP.
13. CONTRACTOR SHALL INSTALL AT EACH SERVICE ENTRANCE A PERMANENT DIRECTORY ACCORDING TO ARTICLE 230 OF THE NATIONAL ELECTRIC CODE.
14. CONTRACTOR SHALL REMOVE AND REINSTALL ALL CEILING TILES AS REQUIRED FOR THE EXECUTION OF ELECTRICAL WORK THAT IS OUTSIDE THE CONTRACT LIMITS OF CONSTRUCTION. CONTRACTOR SHALL REPLACE CEILING TILES WITH IDENTICAL MATERIAL WHERE DAMAGED BY THIS CONTRACTOR.
15. UNLESS OTHERWISE STATED, THE MINIMUM CIRCUIT SHALL BE (2) #12 AND (1) #12 GND IN 3/4" CONDUIT FOR IN DOORS OR IN 1" CONDUIT FOR EXTERIOR APPLICATIONS.

ELECTRICAL SYMBOLS:

ALL CIRCUITS SHALL BE (2) #12's WITH (1) #12 GND MINIMUM U.N.O.

(J) CEILING-MOUNTED JUNCTION BOX (4"x4"x1-1/2" MIN.)

[J] WALL-MOUNTED JUNCTION BOX (4"x4"x1-1/2" MIN.)

FB# FLOORBOX
FB# INDICATES FLOOR BOX REQUIREMENTS

FB1 - FLOOR BOX
POWER:
(1) 5-20 DUPLEX RECEPTACLES.

COMMUNICATIONS:
(1) DATA OUTLETS (RJ-45).

FB2 - FLOOR BOX
POWER:
(2) 5-20 DUPLEX RECEPTACLES.

COMMUNICATIONS:
(2) DATA OUTLETS (RJ-45).

FB3 - FLOOR BOX
POWER:
(2) 5-20 DUPLEX RECEPTACLES.

FB4 - FLOOR BOX
POWER:
(1) 208V/2P BREAKER WITH
120V WHIP (3) #12, (1) #12 GND, 1" C
WITH SHARED NEUTRAL.

COMMUNICATIONS:
PROVIDE CAT6 DATA CONNECTION PER FLOOR PLAN.

LP1 PANELBOARD LOCATION ON PLANS. "LNL1" INDICATES DESIGNATION.

(A) FEEDER SCHEDULE NOTE. "A" INDICATES FEEDER IN SCHEDULE.

CU 1 MECHANICAL EQUIPMENT DESIGNATION. "CU-1" INDICATES ITEM IN MECHANICAL EQUIPMENT DATA SCHEDULE. REFER TO MECHANICAL EQUIPMENT SCHEDULE FOR ADDITION REQUIREMENTS.

CIRCUIT CONDUIT ROUTING. " " INDICATES ONE (1) GROUND CONDUCTOR, ONE (1) NEUTRAL CONDUCTOR AND TWO (2) PHASE CONDUCTORS RESPECTIVELY. " " INDICATES ISOLATED GROUND CONDUCTOR. ALL CONDUCTORS SHALL BE #12 AWG MINIMUM U.N.O.

CIRCUIT/CONDUIT "HOMERUN".

CONDUIT ROUTED UNDER SLAB.

CONDUIT ROUTED IN CEILING SPACE OF LEVEL BELOW.

CONDUIT ROUTED EXPOSED AS SHOWN.

CONDUIT TURNING UP.

CONDUIT TURNING DOWN.

GROUND CONNECTION OR LIGHTNING PROTECTION GROUND ROD LOCATION.

$ MP MOTOR STARTING SWITCH. MOUNT AT 48" A.F.F. U.N.O. "M" INDICATES MOTOR. "P" INDICATES WITH PILOT LIGHT.

(1) MOTOR CONNECTION. "1" INDICATES HORSEPOWER.

POWER POKE-THRU DEVICE. PROVIDE ADAPTER PLATE FOR FLEXIBLE CONDUIT CONNECTION.

90A 3-POLE ELECTRICAL DISCONNECT, SUBTEXT DENOTES DISC. AMP RATING AND NUMBER OF CONDUCTORS.

PUSHBUTTON.

COMMUNICATION SYMBOLS:

A COMMUNICATION ROUGH-IN ONLY WALL BOX. PROVIDE MINIMUM 4" x 4" x 2-1/8" DEEP BOX MOUNTED 18" ABOVE FLOOR. UNLESS NOTED OTHERWISE PROVIDE SINGLE GANG MUD RING AND 3/4" CONDUIT WITH BUSHING ROUTED INTO AN ACCESSIBLE CEILING SPACE. PROVIDE PULL STRING AND BLANK FACEPLATE.

A COMMUNICATION OUTLET IN RECESSED WALL BOX. PROVIDE MINIMUM 4" x 4" x 2-1/8" DEEP BOX MOUNTED 18" ABOVE FLOOR. UNLESS NOTED OTHERWISE PROVIDE SINGLE GANG MUD RING AND 3/4" CONDUIT WITH BUSHING ROUTED INTO AN ACCESSIBLE CEILING SPACE. PROVIDE CABLING AND JACKS AS DENOTED (SEE BELOW). "#A" (TYPICAL) INDICATES CABLING AND CONNECTIVITY REQUIREMENTS.

CABLING REQUIREMENTS

"#A" - TELEPHONE CABLE (CAT 5e)

"WA" - WALL PHONE, MOUNT 48" A.F.F. FACEPLATE SHALL HAVE BASE UNIT MOUNTING STUDS

"#D" - DATA CABLE (CAT 6).

"WAP" - WIRELESS ACCESS POINT. PROVIDE CAT6 WITH MALE RJ45

NOTE: NUMBER (#) BEFORE CABLE TYPE INDICATES QUANTITY

TV CONNECTION. PROVIDE WIREMOLD EVOLUTION WALL BOXES. BOX SHALL HAVE POWER AND DATA ON TOP WITH SPACE ON BOTTOM. PROVIDE 1" C. FOR DATA AND 3/4" C. FOR POWER. PROVIDE CAT6 FROM SERVER TO BOX AND PROVIDE TERMINATION TO CABLE.

VC VOLUME CONTROLLER FOR SPEAKERS

RECEPTACLE SYMBOLS:

TYPE DESIGNATION:

"SW"- NEMA 5-20R GROUND TYPE DUPLEX RECEPTACLE CIRCUIT THROUGH LOCAL OCCUPANCY SENSOR CONTACTOR LOCATED ABOVE CEILING. REFER TO LIGHTING PLAN FOR LOCATION OF CONTACTOR.

"TVSS"-NEMA 5-20R SURGE SUPPRESSION TYPE DUPLEX RECEPTACLE.

"MW"- MICROWAVE RECEPTACLE.

"TV"- TV RECEPTACLE. MOUNT ADJACENT TO TV OUTLET. REFER TO COMMUNICATIONS FLOOR PLANS FOR TV OUTLET LOCATIONS.

"EWC"- ELECTRIC WATER COOLER RECEPTACLE: CONCEALED BEHIND WATER COOLER ACCESS PLATE OR DIRECTLY BELOW AND CENTER ON EWC. CONTRACTOR SHALL VERIFY TYPE OF EWC TO BE INSTALLED.

"H"- MOUNT OUTLET HORIZONTALLY.

"G"- INDICATES A 5-20 RECEPTACLE (NON-GFCI) PROTECTED BY GFCI PROTECT CIRCUIT BREAKER. PROVIDE PERMANENT LABEL.

"A"- INDICATES A 5-20 RECEPTACLE (NON-AFCI) PROTECTED BY AFCI PROTECT CIRCUIT BREAKER. PROVIDE PERMANENT LABEL.

NEMA 5-20R GROUND TYPE DUPLEX RECEPTACLE. SUBSCRIPT INDICATES TYPE. MOUNT AT 18" A.F.F. UNLESS NOTED OTHERWISE.

NEMA 5-20R G.F.I. DUPLEX RECEPTACLE. MOUNT 18" A.F.F. UNLESS NOTED OTHERWISE

NEMA 5-20R DOUBLE DUPLEX RECEPTACLE. SUBSCRIPT INDICATES TYPE. MOUNT 18" A.F.F. UNLESS NOTED OTHERWISE.

NEMA 5-20R G.F.I. DOUBLE DUPLEX RECEPTACLE. MOUNT 18" A.F.F. UNLESS NOTED OTHERWISE.

NEMA 5-20R GROUND TYPE SIMPLEX RECEPTACLE. SUBSCRIPT INDICATES TYPE. MOUNT AT 18" A.F.F. U.N.O.

SPECIAL PURPOSE RECEPTACLE AS INDICATED ON DRAWINGS SUBSCRIPT INDICATES TYPE. MOUNT AT 18" A.F.F. U.N.O.

CORD REEL RECEPTACLE. REFER TO DETAIL ON FLOOR PLAN.

LIGHTING SYMBOLS:

" " INDICATES FOR DEVICE TO BE WALL-MOUNTED

ALL CIRCUITS SHALL BE (2) #12's WITH (1) #12 GND MINIMUM U.N.O.

B-LLC 23,a,b,c DOWNLIGHT.
SYMBOL NOMENCLATURE:

"B"- INDICATES FIXTURE TYPE.

"23"- NUMBER DESIGNATES FIXTURE CIRCUIT.

"LLC"- FIXTURE CONTROLLED BY LIGHTING CONTROL SYSTEM REFER TO LIGHTING CONTROL DIAGRAM FOR DEVICES AND CONTROLS.

"a,b,c"- FIXTURE CONTROLLED BY LOCAL SWITCH REFER TO LIGHTING CONTROL SYMBOL FOR CONTROL METHOD

TYPICAL OF ALL LIGHT FIXTURES. SEE LIGHT FIXTURE SCHEDULE FOR MORE INFORMATION.

WALL MOUNTED DOWNLIGHT.

LIGHT FIXTURE. SIZE AS INDICATED.

WALL MOUNTED LIGHT FIXTURE.

STRIP LIGHT FIXTURE.

EMERGENCY STRIP LIGHT FIXTURE.

EMERGENCY DOWNLIGHT.

CEILING MOUNTED EMERGENCY LIGHT FIXTURE.

EXIT LIGHT FIXTURE. PROVIDE WITH ARROWS AS INDICATED.

DECORATIVE POST TOP SITE LIGHTING FIXTURE.

POLE MOUNTED SITE LIGHTING FIXTURE.

CEILING FAN - REFER TO LIGHT FIXTURE SCHEDULE FOR TYPE.

OTHER:

KB KNOCK BOX, PROVIDED BY OTHERS. PROVIDE MONITOR MODULE AS INDICATED ON PLANS.

4 / E301 DETAIL REFERENCE. "4" INDICATES DETAIL # "E301" INDICATES SHEET. REFER TO DETAIL FOR ADDITIONAL REQUIREMENTS.

1 SHEET KEYED NOTE "1" INDICATES NOTE #.

LIGHTING CONTROL SYMBOLS:

$ WALL SWITCH. MOUNT AT 48" A.F.F. U.N.O. UPPER CASE SUBSCRIPT INDICATES TYPE LOWER CASE SUBSCRIPT INDICATES SWITCH LEG. SUBSCRIPTS 3, 4 INDICATE THREE WAY AND FOUR WAY RESPECTIVELY.

TYPE DESIGNATION

"DM"- DIMMER CONTROL.

"LV"- INDICATES 0-10V AND TO PROVIDE POWER PACK FOR SWITCH AND OCCUPANCY SENSOR.

"NL"- NIGHT LIGHT FIXTURE CIRCUIT TO PANELBOARD "MAIN" WITH NO LOCAL CONTROL.

"OS"- DUAL (PIR AND ULTRASONIC) OCCUPANCY SENSOR WALL SWITCH.

"110/" NUMBER INDICATE ROOM NUMBER. LETTER INDICATES SWITCH NUMBER IN THE ROOM.

PC PHOTO CELL DEVICE.

C CONTACTOR.

LCPS LIGHTING CONTROL POWER STATION. MOUNT ON 4" x 4" BOX ABOVE CEILING.

LCP LIGHTING CONTROL PANEL. INCLUDES SYSTEM CONTROLLER. CONTAINS RELAYS.

LLC LOCAL LIGHTING CONTROLLER. REFER TO DETAIL 1/E8.0.0

NI NETWORK INTERFACE

M -A- OCCUPANCY SENSOR, CEILING MOUNTED. WIDE ANGLE LENS. MOUNT AT 96" A.F.F. SUBSCRIPT DENOTES SENSOR TYPE.
"IR"- PASSIVE INFRARED TECHNOLOGY.
"DT"- DUAL (PIR + ULTRASONIC) TECHNOLOGY.

J / R OCCUPANCY SENSOR RELAY PACK 20A CONTACTOR MOUNTED ON J-BOX ABOVE ACCESSIBLE CEILING FOR SWITCHING LOCAL RECEPTACLE. REFER TO POWER PLANS FOR RECEPTACLE LOCATIONS.

Scenic Regional Library
read, explore, grow

SCENIC REGIONAL LIBRARY
WRIGHT CITY BRANCH
60 WILDCAT DRIVE
WRIGHT CITY, MO 63390

JEMA SDA ARCHITECTS

ARCHITECT
JEMA
3005 LOCUST ST.
ST. LOUIS, MO 63103
T (314) 531-7400
CONTACT: SCOTT CLARK
E-MAIL: SCLARK@JEMASTL.COM

ARCHITECT
SAPP DESIGN ASSOCIATES ARCHITECTS
3750 SOUTH FREMONT
SPRINGFIELD, MO 65804
T (417) 877-9600
F (417) 877-9696
CONTACT: JAMES STUFFLEBEAM
E: STUFFLEBEAM@SDAARCHITECTS.COM

CIVIL
COCHRAN
530A E. INDEPENDENCE DRIVE
UNION, MO 63084
CONTACT: DAVE VAN LEER
T (636) 584-0540
F (636) 584-0512
E-MAIL: DVANLEER@COCHRAN.COM

STRUCTURAL
ALPER AUDI, INC.
1804 BORMAN CIRCLE DRIVE
ST. LOUIS, MO 63146
T (314) 432-8600
F (314) 807-2774
CONTACT: STEVE EHRETT
E-MAIL: STEVE.EHRETT@ALPERAUDI.COM

MECHANICAL, ELECTRICAL, PLUMBING
BRIC PARTNERSHIP, LLC
343 S. KIRKWOOD ROAD, SUITE 204
KIRKWOOD, MO 63122
T (314) 725-5889
CONTACT: BRUCE COLEMAN
E: BCOLEMAN@BRICPARTNERSHIP.COM

ENGINEER OF RECORD:

PRELIMINARY
NOT FOR CONSTRUCTION

TODD L. KUNO
MO. LICENSE NO. 2015017018
BRIC MO CERTIFICATE OF AUTHORITY 2002028690

No.	Date	Description
	04/14/17	ISSUED FOR BID

DRAWN BY: **TLK**

PROJECT NUMBER: **16-1161.03**

SHEET TITLE:
LEGEND, SYMBOLS, NOTES, & ABBREVIATIONS - ELECTRICAL

E-001

THE PROFESSIONAL ENGINEER'S SEAL AFFIXED TO THIS SHEET APPLIES ONLY TO THE MATERIAL AND ITEMS SHOWN ON THIS SHEET. ALL DRAWINGS, INSTRUMENTS OR OTHER DOCUMENTS NOT EXHIBITING THIS SEAL SHALL NOT BE CONSIDERED PREPARED BY THIS ENGINEER, AND THIS ENGINEER EXPRESSLY DISCLAIMS ANY AND ALL RESPONSIBILITY FOR SUCH PLAN, DRAWINGS OR DOCUMENTS NOT EXHIBITING THIS SEAL.

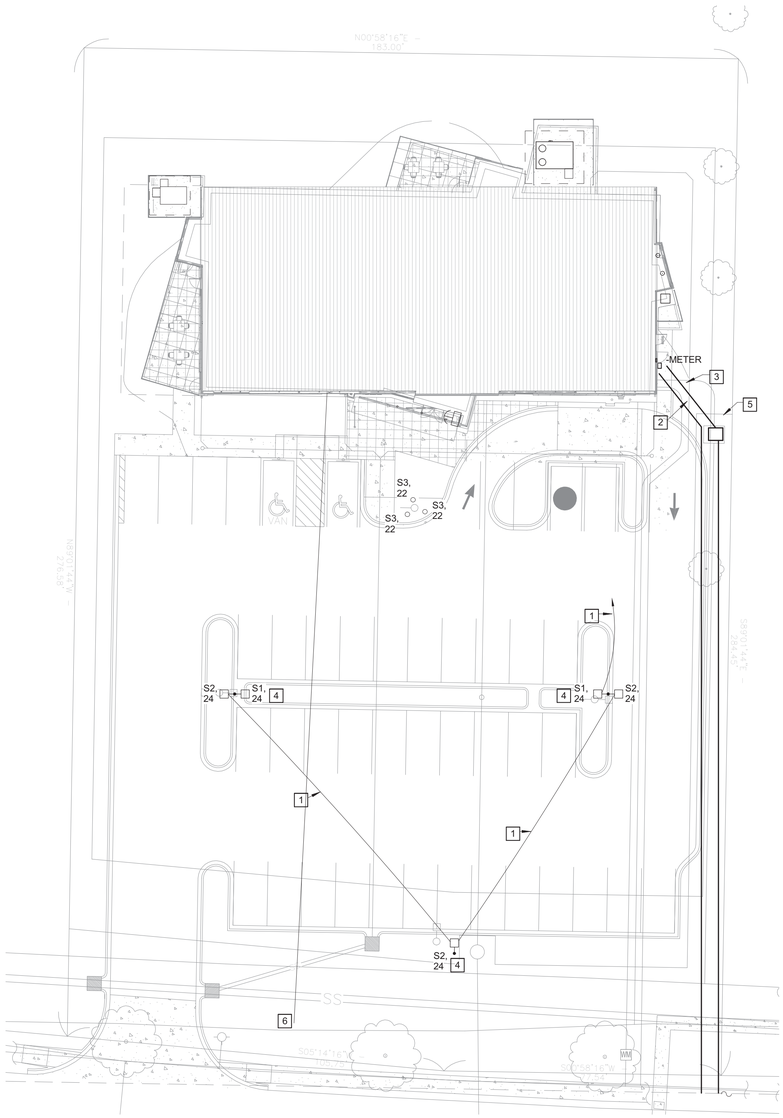

1 E-100 SITE PLAN - ELECTRICAL
1" = 20'-0"

GENERAL NOTES

1. ELECTRICAL CONTRACTOR SHALL CORRIDNATE SITE LIGHTING FIXTURES PRIOR TO INSTALLING BASE WITH CIVIL CONTRACTOR.
2. FLAG POLE FLOOD LIGHTS (S3 FIXTURE) SHALL BE EVENLY SPACED AROUND THE FLAG POLE APPROXIMALY 4' AWAY FROM THE FLAG POLE.

KEYED NOTES

#	
1	PROVIDE (2) #10, (1) #10 GND, IN 1" CONDUIT POWER TO SITE LIGHTING FIXTURES.
2	UNDERGROUND DUCTS FOR COMMUNICATIONS SERVICES. TWO (2) 2" PVC. SEE SHEET E-401 FOR CONTINUATION INTO BUILDING. COORDINATE WITH SERVICE PROVIDERS AND ROUTE TO POLE OF MANHOLE AS REQUIRED.
3	PROVIDE 4" CONDUIT TO UTILITY SERVICE. SEE CIVIL PLAN FOR ROUTE.
4	PROVIDE 20' RTS POLE, AND POLE BASE. SEE DETAIL ON THIS SHEET FOR GROUNDING, WIRING, AND BASE DETAILS.
5	PROVIDE UTILITY TRANSFORMER CONCRETE PAD PER UTILITY REQUIREMENTS.
6	ELECTRICAL CONTRACTOR SHALL PROVIDE 1" CONDUIT FROM BUILDING ELECTRICAL ROOM TO THE LOCATION INDICATED. PROVIDE PULL STRING, CAP AND LABEL CONDUIT ON EACH END. CONTRACTOR SHALL PROVIDE EXACT LOCATION OF END OF CONDUIT ON AS BUILDS.

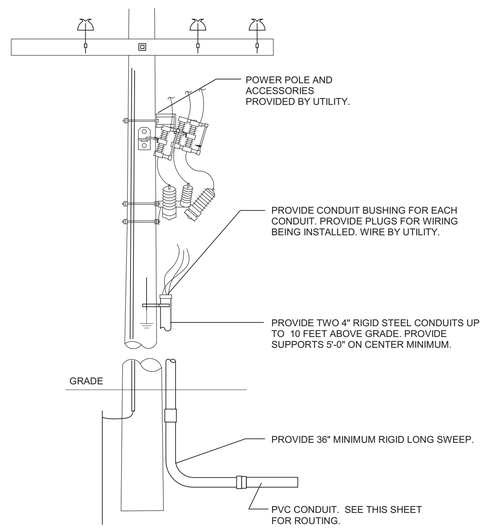

6 E-100 UTILITY POLE DETAIL
N.T.S.

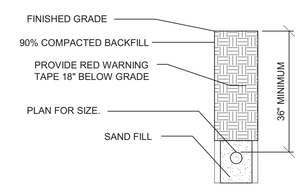

5 E-100 TRENCHING DETAIL
N.T.S.

SITE LIGHTING CONTACTOR SCHEDULE

CONTACTOR NAME	POLES / AMPS	CIRCUITS	REMARKS	CONTROL CIRCUIT
LC-A	2/30	MAIN - 45/47	BUILDING LIGHTS EXTERIOR	PC-ON/ TC-OFF/ SWITCH - OVERRIDE ON

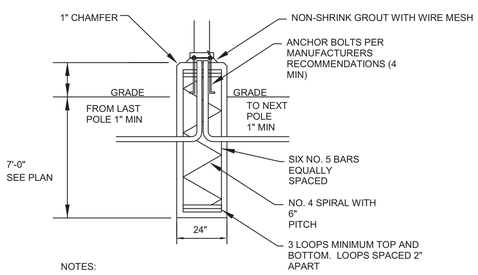

NOTES:

1. ALL CONCRETE ABOVE GRADE SHALL BE HAND RUBBED TO A SMOOTH FINISH.
2. CONCRETE POLE BASE BY E.C. CONCRETE TO HAVE 3500 PSI MIN COMPRESSIVE STRENGTH AT 28 DAYS AND USE ASTM A615 GRADE 60 REINFORCING STEEL.

2 E-100 SITE LIGTHTING POLE BASE DETAIL
N.T.S.

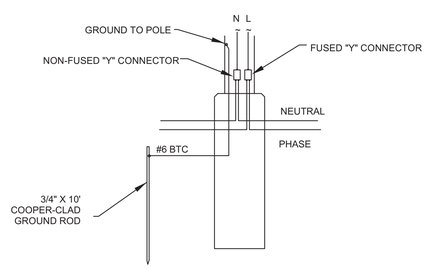

NOTES:

1. FUSED "Y" CONNECTOR TO BE FUSED AT 10 AMPS AND RATED FOR 600 VOLTS.
2. GROUND POLE AND NEUTRAL TO GROUND ROD USING CONDUCTOR INDICATED.

3 E-100 SITE LIGHTING POLE WIRING DETAIL
N.T.S.

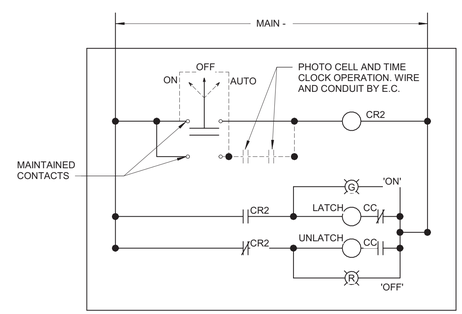

ALL WIRING SHALL BE #10 U.N.O.
MECHANICALLY HELD LIGHTING CONTACTOR.

4 E-100 SITE LIGHTING CONTACTOR
N.T.S.

Scenic Regional Library
read, explore, grow

SCENIC REGIONAL LIBRARY
WRIGHT CITY BRANCH
60 WILDCAT DRIVE
WRIGHT CITY, MO 63390

JEMA
SDA ARCHITECTS

ARCHITECT
JEMA
3005 LOCUST ST.
ST. LOUIS, MO 63103
T (314) 531-7400
CONTACT: SCOTT CLARK
E-MAIL: SCLARK@JEMASTL.COM

ARCHITECT
SAPP DESIGN ASSOCIATES ARCHITECTS
3750 SOUTH FREMONT
SPRINGFIELD, MO 65804
T (417) 877-9600
F (417) 877-9696
CONTACT: JAMES STUFFLEBEAM
E: STUFFLEBEAM@SDAARCHITECTS.COM

CIVIL
COCHRAN
530A E. INDEPENDENCE DRIVE
UNION, MO 63084
CONTACT: DAVE VAN LEER
T (636) 584-0540
F (636) 584-0512
E-MAIL: DVANLEER@COCHRAN.COM

STRUCTURAL
ALPER AUDI, INC.
1804 BORMAN CIRCLE DRIVE
ST. LOUIS, MO 63146
T (314) 432-8600
F (314) 807-2774
CONTACT: STEVE EHRETT
E-MAIL: STEVE.EHRETT@ALPERAUDI.COM

MECHANICAL, ELECTRICAL, PLUMBING
BRIC PARTNERSHIP, LLC
343 S. KIRKWOOD ROAD, SUITE 204
KIRKWOOD, MO 63122
T (314) 725-5889
CONTACT: BRUCE COLEMAN
E: BCOLEMAN@BRICPARTNERSHIP.COM

ENGINEER OF RECORD:

PRELIMINARY
NOT FOR CONSTRUCTION

TODD L. KUNO
MO. LICENSE NO. 2015017018
BRIC MO CERTIFICATE OF AUTHORITY 2002028690

No.	Date	Description
	04/14/17	ISSUED FOR BID

DRAWN BY: **TLK**

PROJECT NUMBER: **16-1161.03**

SHEET TITLE:
SITE PLAN - ELECTRICAL

E-100

THE PROFESSIONAL ENGINEER'S SEAL AFFIXED TO THIS SHEET APPLIES ONLY TO THE MATERIAL AND ITEMS SHOWN ON THIS SHEET. ALL DRAWINGS, INSTRUMENTS OR OTHER DOCUMENTS NOT EXHIBITING THIS SEAL SHALL NOT BE CONSIDERED PREPARED BY THIS ENGINEER, AND THIS ENGINEER EXPRESSLY DISCLAIMS ANY AND ALL RESPONSIBILITY FOR SUCH PLAN, DRAWINGS OR DOCUMENTS NOT EXHIBITING THIS SEAL.

1 EL-201 FLOOR PLAN - FIRST FLOOR - ELECTRICAL LIGHTING
1/8" = 1'-0"

GENERAL NOTES

1. ALL LIGHTING SHALL BE CONTROLLED BY A TIME CLOCK UNLESS NOTED TO BE CONTROLLED BY AN OCCUPANCY SENSOR. REFER TO LEGEND SHEET FOR TIME CLOCK DETAILS. A TIME CLOCK OVERRIDE SWITCH SHALL BE PROVIDED IN THE WORK ROOM 108.
2. ALL LIGHTING IN STORAGE, OFFICES, STUDIES, MECHANICAL/ELECTRICAL, MEETING ROOM AND BATHROOMS ARE CONTROLLED BY OCCUPANCY OR MOTION SENSORS.
3. EGRESS LIGHTING WILL HAVE DEDICATED POWER. WHEN NO POWER IS DETECTED, EGRESS LIGHTING WILL TURN ON.
4. ELECTRICAL CONTRACTOR SHALL REFER TO ARCHITECTS CEILING PLAN FOR FINAL LOCATION OF CEILING FIXTURES.

KEYED NOTES

#

1. ALL SITE AND BUILDING LIGHTING WILL BE CONTROLLED BY A PHOTO CELL LOCATED ON THE EXTERIOR EAST AND WEST WALLS OF THE BUILDING. PROVIDE WIRE AND CONDUIT TO THE PHOTO CELL IN SHOWN LOCATION.
2. PROVIDE STRIP LED LIGHT FIXTURES IN DISPLAY CASE. SEE DETAIL ON THIS SHEET FOR DISPLAY CASE LIGHTING. PROVIDE LED DRIVER ABOVE THE CEILING OR AS HIGH AS POSSIBLE. DISPLAY CASE LIGHTS SHALL BE CONTROLLED BY A DIMMING CONTROLLER AND LOW VOLTAGE DIMMING SWITCH LOCATED ABOVE THE DESK. LABEL SWITCH AS CASE LIGHTS.
3. EXHAUST FAN IN THE RESTROOM SHALL BE CONTROLLED BY THE LIGHTING CONTROL IN THE SPACE.
4. PROVIDE UNDER CABINET LIGHTING. PROVIDE LINE VOLTAGE SWITCH TO CONTROL THE LIGHT FIXTURE. UNDER CABINET LIGHT FIXTURE DRIVER SHALL BE LOCATED IN THE BACK CORNER UNDER THE CABINET.

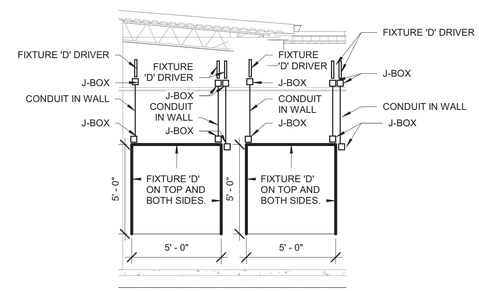

2 EL-201 CASE DETAIL
1/4" = 1'-0"

LIGHT FIXTURE SCHEDULE

MARK	MANUFACTURER 1	Model	Voltage	LAMPS	MOUNTING	DESCRIPTION
A	FREELUX	TUN7	120V	7W PER 20", 75 LM/W, 80 CRI, 3500K, UNDER CABINET	SURFACE MOUNT	UNDER CABINET FIXTURE. PROVIDE DRIVER AND CABLE AS REQUIRED.
B	OCL	LO1	120V	48", 145W, 13050 LUMENS, LED, 3500K LIGHT TEMP	PENDENT / CEILING MOUNTED	PENDANT WITH 3 ANDGLED AIRCRAFT CABLES AND WHITE POWER CORD TO CANOPY, MATTE WHITE POLYETHYLENE FINISH, WITH 0-10V DIMMING DRIVER.
B1	OCL	LO1	120V	72", 145W, 13050 LUMENS, LED, 3500K LIGHT TEMP	PENDENT / CEILING MOUNTED	PENDANT WITH 3 ANDGLED AIRCRAFT CABLES AND WHITE POWER CORD TO CANOPY, MATTE WHITE POLYETHYLENE FINISH, WITH 0-10V DIMMING DRIVER.
C	IKEA	FILLSTA	120V	7", 11W, 600 LUMENS, LED, 3500K LIGHT TEMP	PENDENT / CEILING MOUNTED	14" DIAMETER
D	LED LINEAR	XOOLUM	120V	10 W/M, 131 LM/W, 80 CRI, 3500K WALL WASH	SURFACE MOUNT	SILVER - ADJUSTABLE MOUNT CABLE OUT THE BACK, PROVIDE DIMMABLE DRIVER. DRIVER SHALL BE LOCATED ABOVE THE CEILING.
E1	METALUX	22CZ	120V	2x2, 34.4W, 3400 LUMENS, LED, 3500K LIGHT TEMP	RECESSED LAY-IN CEILING	UNIVERSAL 120V WITH 0-10V DIMMING DRIVER.
H	METALUX	SNLED	120V	4', 25.07W, 3061 LUMENS, LED, 3500K LIGHT TEMP	CEILING SURFACE MOUNT	COMMERCIAL STRIPLIGHT, LED 4.0, CLEAR LENS, UNIVERSAL 120V WITH 0-10V DIMMING DRIVER.
J	HALO	PD6	120V	6", 17.1W, 1500 LUMENS, 80 CRI, LED, 3500K LIGHT TEMP	RECESSED CEILING MOUNT	DOWNLIGHT, SEMI-SPECULAR CLEAR, UNIVERSAL 120V WITH 0-10V DIMMING DRIVER.
JE	HALO	PD6	120V	6", 17.1W, 1500 LUMENS, 80 CRI, LED, 3500K LIGHT TEMP	RECESSED CEILING MOUNT	DOWNLIGHT, SEMI-SPECULAR CLEAR, UNIVERSAL 120V WITH 0-10V DIMMING DRIVER. WITH REMOTE EMERGENCY BACK UP BATTERY.
K	TECH LIGHTING	ELEMENT	120V	4" ROUND, FLANGE, BEVEL, 1500 LUMENS 80CRI, 3500K, 40 DEG	RECESSED CEILING MOUNT	DOWNLIGHT, SEMI-SPECULAR CLEAR, UNIVERSAL 120V WITH 0-10V DIMMING DRIVER.
M	SURE-LITES	SEL50 LED	120V	BUG EYE, LED	CEILING SURFACE MOUNT	DEDICATED BUG LIGHTING, WHITE FINISH, UNIVERSAL 120V, WITH BACKUP BATTERY
S1	COOPER LIGHTING	GALLEON	120V	9500 LUM, 4000K, 85W, T2	20' POLE RTS	PROVIDE 20' RTS POLE, SEE DETAIL ON E-100. BLACK FINISH.
S2	COOPER LIGHTING	GALLEON	120V	9500 LUM, 4000K, 85W, T3	20' POLE RTS	PROVIDE 20' RTS POLE, SEE DETAIL ON E-100. BLACK FINISH.
S3	COOPER LIGHTING	NFFLD-S	120V	2700 LUM, 5000K, 3H X 3V	GRADE MOUNT	GROUND MOUNT, PROVIDE 12" DIAMETER CONCRETE SUPPORTS.
W	COOPER LIGHTING	IST	120V	5000 LUM, 4000K, 45W, BL3	WALL MOUNTED	TRAPEZOID, BLACK FINISH, PROVIDE WEATHER SEAL AROUND BACK BOX.
WE	COOPER LIGHTING	IST	120V	5000 LUM, 4000K, 45W, BL3	WALL MOUNTED	TRAPEZOID, BLACK FINISH, PROVIDE WEATHER SEAL AROUND BACK BOX. PROVIDE WITH COLD WEATHER BATTERY PACK.
X	COOPER	LPX SERIES	120V	3.8W, LED, RED	WALL MOUNTED	LED EDGE LIT EXIT SIGN. PROVIDE SINGLE FACE, AND CHEVRONS INDICATED ON DRAWINGS.
X1	COOPER	LPX SERIES	120V	3.8W, LED, RED	WALL MOUNTED	LED EDGE LIT EXIT SIGN. PROVIDE SINGLE FACE, AND CHEVRONS INDICATED ON DRAWINGS.
X2C	COOPER	ES SERIES	120V	3.8W, LED, RED	CEILING MOUNTED	LED EDGE LIT EXIT SIGN. PROVIDE SINGLE FACE, AND CHEVRONS INDICATED ON DRAWINGS.

ROOM SCHEDULE

Number	Name
100	CIRCULATION
400	VESTIBULE
401	CORRIDOR
402	MENS
403	WOMENS
404	MEETING ROOM
405	COATS
406	STORAGE
407	CHILDREN AREA
408	CIRCULATION
409	ADULT AREA
410	TEEN AREA
411	WORK ROOM
412	OFFICE
413	STUDY
414	STUDY
415	CORRIDOR
416	STORAGE
417	JANITORS CLOSET
418	BREAK ROOM
419	MECH / ELEC
420	BOOK DROP

Scenic Regional Library
read, explore, grow

SCENIC REGIONAL LIBRARY
WRIGHT CITY BRANCH
60 WILDCAT DRIVE
WRIGHT CITY, MO 63390

JEMA
SDA ARCHITECTS

ARCHITECT
JEMA
3005 LOCUST ST.
ST. LOUIS, MO 63103
T (314) 531-7400
CONTACT: SCOTT CLARK
E-MAIL: SCLARK@JEMASTL.COM

ARCHITECT
SAPP DESIGN ASSOCIATES ARCHITECTS
3750 SOUTH FREMONT
SPRINGFIELD, MO 65804
T (417) 877-9600
F (417) 877-9696
CONTACT: JAMES STUFFLEBEAM
E: STUFFLEBEAM@SDAARCHITECTS.COM

CIVIL
COCHRAN
530A E. INDEPENDENCE DRIVE
UNION, MO 63084
CONTACT: DAVE VAN LEER
T (636) 584-0540
F (636) 584-0512
E-MAIL: DVANLEER@COCHRAN.COM

STRUCTURAL
ALPER AUDI, INC.
1804 BORMAN CIRCLE DRIVE
ST. LOUIS, MO 63146
T (314) 432-8600
F (314) 807-2774
CONTACT: STEVE EHRETT
E-MAIL: STEVE.EHRETT@ALPERAUDI.COM

MECHANICAL, ELECTRICAL, PLUMBING
BRIC PARTNERSHIP, LLC
343 S. KIRKWOOD ROAD, SUITE 204
KIRKWOOD, MO 63122
T (314) 725-5889
CONTACT: BRUCE COLEMAN
E: BCOLEMAN@BRICPARTNERSHIP.COM

ENGINEER OF RECORD:

PRELIMINARY
NOT FOR CONSTRUCTION

TODD L. KUNO
MO. LICENSE NO. 2015017018
BRIC MO CERTIFICATE OF AUTHORITY 2002028690

No.	Date	Description
	04/14/17	ISSUED FOR BID

DRAWN BY: **TLK**

PROJECT NUMBER: **16-1161.03**

SHEET TITLE:
FLOOR PLAN & LIGHT FIXTURE SCHEDULE - FIRST FLOOR - ELECTRICAL LIGHTING

EL-201

THE PROFESSIONAL ENGINEER'S SEAL AFFIXED TO THIS SHEET APPLIES ONLY TO THE MATERIAL AND ITEMS SHOWN ON THIS SHEET. ALL DRAWINGS, INSTRUMENTS OR OTHER DOCUMENTS NOT EXHIBITING THIS SEAL SHALL NOT BE CONSIDERED PREPARED BY THIS ENGINEER, AND THIS ENGINEER EXPRESSLY DISCLAIMS ANY AND ALL RESPONSIBILITY FOR SUCH PLAN, DRAWINGS OR DOCUMENTS NOT EXHIBITING THIS SEAL.

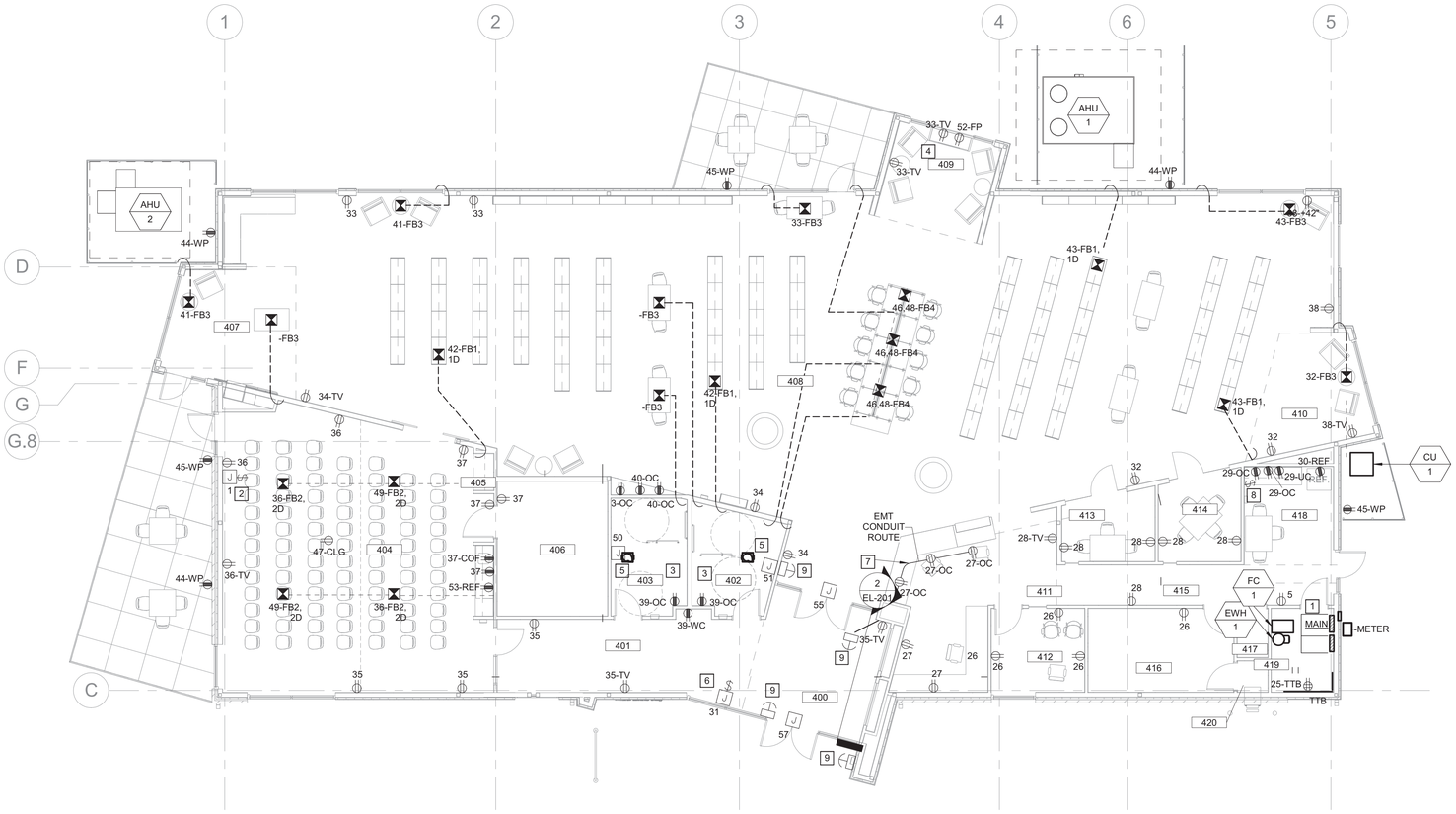

1 EP-301 FLOOR PLAN - FIRST FLOOR - ELECTRICAL POWER
1/8" = 1'-0"

GENERAL NOTES

1 FOR ALL FLOOR BOXES, PROVIDE POWER, DATA, AND CONDUIT TO EACH ACCORDINGLY. REFER TO SHEET E-001 FOR DEFINITIONS OF DIFFERENT FLOOR BOXES. CONDUIT TO BE RAN BACK TO NEAREST WALL, AS SHOWN ON DRAWINGS, UP THROUGH WALL AND BACK TO MAIN PANEL IN ELECTRICAL ROOM 115.

KEYED NOTES

#

1 PROVIDE RECEPTACLE ON TOP OF RACK.
2 PROVIDE CONNECTION TO PROJECTOR SCREEN MOTOR. PROVIDE ¾" CONDUIT FROM THE MOTOR CONTROLLER TO THE PROJECTOR SCREEN SWITCH. PROVIDE 2 GANG BACK BOX WITH SINGLE GANG MUD RING FOR THE PROJECTOR SCREEN SWITCH. COORDINATE LOCATION WITH PROJECTOR SCREEN.
3 PROVIDE 1-1/4" PVC CONDUIT FROM FLOOR BOX TO WALL AS SHOWN. CONDUIT SHALL RISE UP WALL AND STUB OUT INTO CEILING SPACE. ROUTE COMMUNICATIONS CABLING FROM BOX TO CEILING SPACE AND CONTINUE TO I.T. ROOM #115 SUPPORTED BY J-HOOKS.
4 PROVIDE 1-1/4" PVC CONDUIT FROM FLOOR BOX TO WALL AS SHOWN. CONDUIT SHALL RISE UP WALL AND STUB OUT INTO CEILING SPACE. ROUTE COMMUNICATIONS CABLING FROM BOX TO CEILING SPACE AND CONTINUE TO I.T. ROOM #115 SUPPORTED BY J-HOOKS.
5 PROVIDE BACK BOX FOR HAND DRYER. PROVIDE FINAL CONNECTION TO HAND DRYER. COORDINATE LOCATION WITH G.C.
6 PROVIDE CONNECTION TO ADA DOOR OPENER. PROVIDE A 20AMP TOGGLE DISCONNECT SWITCH, ABOVE THE CEILING, FOR ADA OPERATOR.
7 PROVIDE EMT CONDUIT TO OVER COUNTER RECEPTACLES IN WORK ROOM 411 AS SHOWN ON DRAWINGS. CONDUIT SHALL BE RAN UNDER COUNTER AND UP THROUGH DESK. PROVIDE (2) #12, (1) #12 GND, IN ¾" CONDUIT.
8 PROVIDE SWITCH FOR GARBAGE DISPOSAL.
9 CONTRACTOR SHALL PROVIDE J-BOX ABOVE CEILING WITH A TOGGLE SWITCH. THE TOGGLE SWITCH SHALL BE USED AS A DISCONNECT SWITCH FOR THE ADA DOOR OPEN. PROVIDE 3/4" CONDUIT WITH PULL STRING FROM THE ADA DOOR CONTROLLER TO ADA PUSH BUTTON. PROVIDE BACK BOX AT PUSH BUTTON FOR ADA INSTALLER.

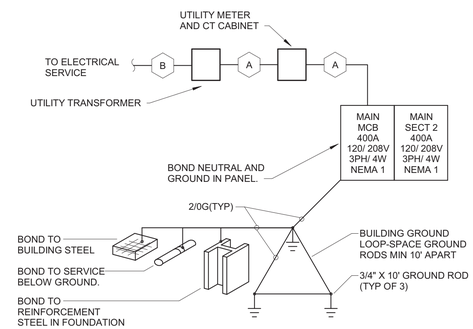

2 EP-301 ELECTRICAL ONE-LINE
N.T.S.

FEEDER SCHEDULE

PLAN MARK	NUMBER OF SETS	NUMBER OF HOT	HOT SIZE	NUMBER OF NEUTRAL	NEUTRAL SIZE	NUMBER OF GROUND	GROUND SIZE	CONDUIT SIZE	NOTES
A	1	3	600KCMIL	1	600KCMIL	-	-	4"	
B	1	-	-	-	-	-	-	4"	

ROOM SCHEDULE

Number	Name
100	CIRCULATION
400	VESTIBULE
401	CORRIDOR
402	MENS
403	WOMENS
404	MEETING ROOM
405	COATS
406	STORAGE
407	CHILDREN AREA
408	CIRCULATION
409	ADULT AREA
410	TEEN AREA
411	WORK ROOM
412	OFFICE
413	STUDY
414	STUDY
415	CORRIDOR
416	STORAGE
417	JANITORS CLOSET
418	BREAK ROOM
419	MECH / ELEC
420	BOOK DROP

Scenic Regional Library
read, explore, grow

SCENIC REGIONAL LIBRARY
WRIGHT CITY BRANCH
60 WILDCAT DRIVE
WRIGHT CITY, MO 63390

JEMA
SDA ARCHITECTS

ARCHITECT
JEMA
3005 LOCUST ST.
ST. LOUIS, MO 63103
T (314) 531-7400
CONTACT: SCOTT CLARK
E-MAIL: SCLARK@JEMASTL.COM

ARCHITECT
SAPP DESIGN ASSOCIATES ARCHITECTS
3750 SOUTH FREMONT
SPRINGFIELD, MO 65804
T (417) 877-9600
F (417) 877-9696
CONTACT: JAMES STUFFLEBEAM
E: STUFFLEBEAM@SDAARCHITECTS.COM

CIVIL
COCHRAN
530A E. INDEPENDENCE DRIVE
UNION, MO 63084
CONTACT: DAVE VAN LEER
T (636) 584-0540
F (636) 584-0512
E-MAIL: DVANLEER@COCHRAN.COM

STRUCTURAL
ALPER AUDI, INC.
1804 BORMAN CIRCLE DRIVE
ST. LOUIS, MO 63146
T (314) 432-8600
F (314) 807-2774
CONTACT: STEVE EHRETT
E-MAIL: STEVE.EHRETT@ALPERAUDI.COM

MECHANICAL, ELECTRICAL, PLUMBING
BRIC PARTNERSHIP, LLC
343 S. KIRKWOOD ROAD, SUITE 204
KIRKWOOD, MO 63122
T (314) 725-5889
CONTACT: BRUCE COLEMAN
E: BCOLEMAN@BRICPARTNERSHIP.COM

ENGINEER OF RECORD:

PRELIMINARY
NOT FOR CONSTRUCTION

TODD L. KUNO
MO. LICENSE NO. 2015017018
BRIC MO CERTIFICATE OF AUTHORITY 2002028690

No.	Date	Description
	04/14/17	ISSUED FOR BID

DRAWN BY: **TLK**

PROJECT NUMBER: **16-1161.03**

SHEET TITLE:
FLOOR PLAN, ONE-LINE, & SCHEDULE - FIRST FLOOR - ELECTRICAL POWER

EP-301

THE PROFESSIONAL ENGINEER'S SEAL AFFIXED TO THIS SHEET APPLIES ONLY TO THE MATERIAL AND ITEMS SHOWN ON THIS SHEET. ALL DRAWINGS, INSTRUMENTS OR OTHER DOCUMENTS NOT EXHIBITING THIS SEAL SHALL NOT BE CONSIDERED PREPARED BY THIS ENGINEER, AND THIS ENGINEER EXPRESSLY DISCLAIMS ANY AND ALL RESPONSIBILITY FOR SUCH PLAN, DRAWINGS OR DOCUMENTS NOT EXHIBITING THIS SEAL.

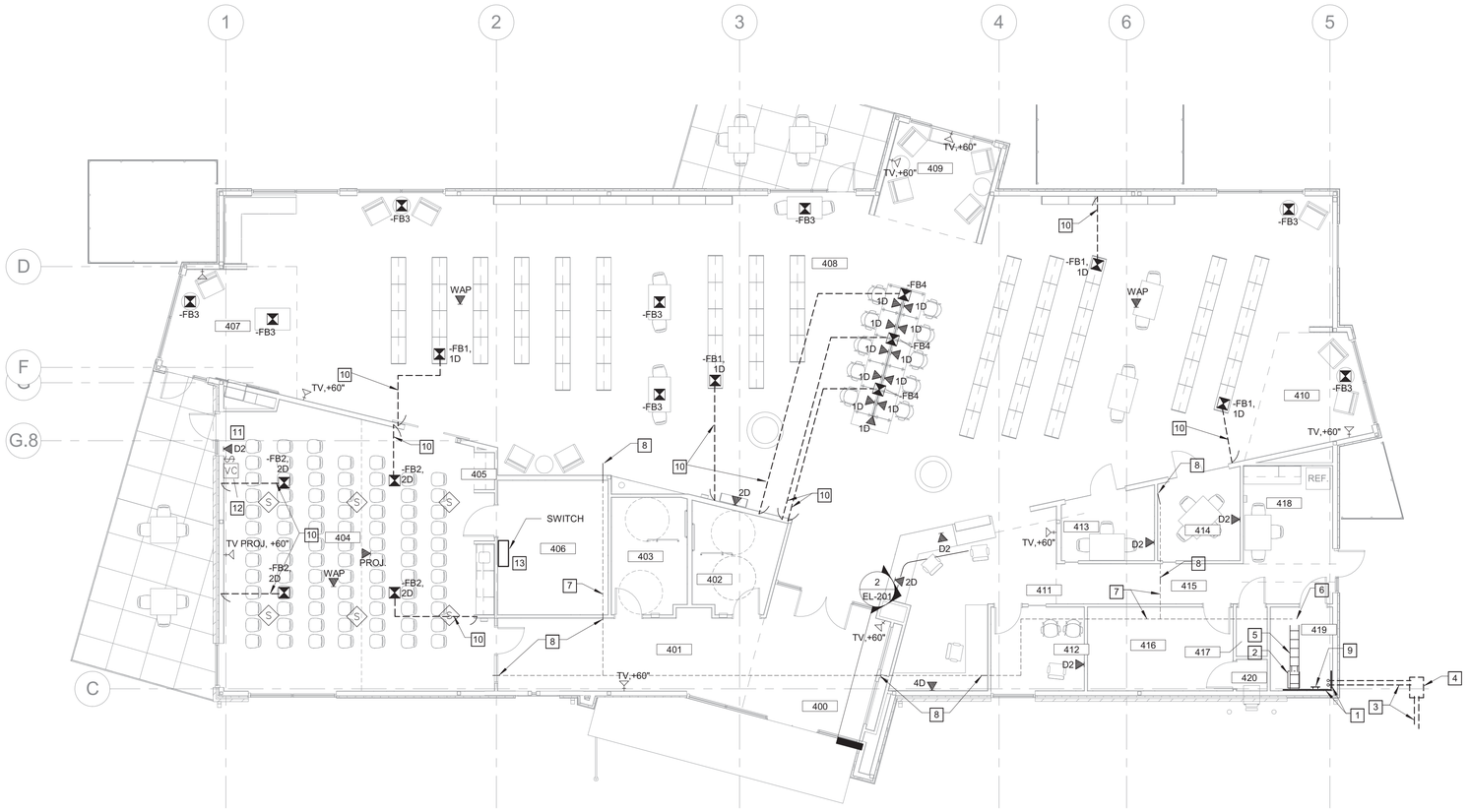

1 E-401 FLOOR PLAN - FIRST FLOOR - ELECTRICAL DATA
1/8" = 1'-0"

KEYED NOTES

#	
1	PROVIDE 3/4" PLYWOOD BACKBOARD FOR MOUNTING COMMUNICATIONS AND DATA EQUIPMENT. PLYWOOD SHALL BE FIRE RETARDANT UL LISTED PRODUCT. COVER WALL FROM 12" AFF TO 108" AFF.
2	PROVIDE 7' TALL 45U 2-POST EQUIPMENT RACK FOR NETWORK AND COMMUNICATIONS EQUIPMENT. RACK SHALL HAVE THREE (3) 1U HORIZONTAL CABLE MANAGERS. MOUNT RACK WITH FRONT OF RACK FACING SOUTH.
3	PROVIDE TWO (2) 2" UTILITY DUCTS FOR COMMUNICATIONS AND DATA SERVICES. DUCTS SHALL STUB UP 12" ABOVE FLOOR WHERE SHOWN. ROUTE FROM ROOM #115 TO UTILITY POLE AS DIRECTED BY SERVICE PROVIDERS, VERIFY.
4	PROVIDE CAST FIBER CEMENT TYPE HAND HOLE WITH 2-BOLT GASKETED COVER SIMILAR TO HUBBELL #B10162230A AND COVER $C10162202A. COORDINATE WITH GRADING CONTRACTOR AND ENSURE THAT BOX IS FLUSH WITH FINISHED SURFACE AND AREA ADJACENT TO BOX DRAINS AWAY FROM BOX COVER.
5	PROVIDE LADDER STYLE CABLE RUNWAY ABOVE RACK SIMILAR TO CHATSWORTH PRODUCTS #10250-712. MOUNT RUNWAY ANCHORED TO TOP OF RACK AND ATTACH TO WALL WITH MANUFACTURERS APPROVED BRACKETS AND HARDWARE.
6	PROVIDE LADDER STYLE CABLE RUNWAY ABOVE RACK SIMILAR TO CHATSWORTH PRODUCTS #10250-712. MOUNT RUNWAY ANCHORED TO TOP OF RACK AND ATTACH TO WALL WITH MANUFACTURERS APPROVED BRACKETS AND HARDWARE.
7	PROVIDE J-HOOK PATHWAY AT APPROX. 8" ABOVE LAY-IN CEILING FOR ROUTING NETWORK CABLING. J-HOOKS SHALL BE 4" WITH RETENTION CLIPS, PROVIDE QUANTITY AS REQUIRED. COORDINATE WITH ALL TRADES AND ADJUST EXACT ROUTING TO PROVIDE ADEQUATE CLEARANCE. ALL CABLING SHALL BE TRAINED, BUNDLED AND LASHED WITH RELEASABLE VELCRO STRAPS, NYLON CABLE TIES ARE NOT ACCEPTABLE. THE DESIGN INTENT IS THAT THIS PATH REPRESENTS A MAJOR ROUTING FOR THE MAJORITY OF CABLING, INDIVIDUAL DROPS AND BUNDLES OF LESS THAT SIX CABLES SHALL UTILIZE 2" J-HOOKS.
8	PROVIDE 4" CONDUIT SLEEVE ABOVE AREA WITH DRYWALL CEILING OR THROUGH WALLS EXTENDING TO DECK. CONDUITS SHALL HAVE BUSHINGS ON ENDS. COORDINATE WITH ALL TRADES AND ADJUST LOCATIONS TO PROVIDE ADEQUATE CLEARANCE. REFERENCE KEY NOTE #7 AND ALIGN WITH PATHWAY.
9	PROVIDE TELECOMMUNICATIONS GROUND BUS FOR BONDING ALL METAL OBJECTS AND EQUIPMENT CHASSIS IN ROOM. BUS SHALL BE 12"x2"x1/4" THICK COPPER WIT PRE-DRILLED HOLES TO MEET ANSI/TIA 607-B STANDARDS. PROVIDE #2 CU BACKBONE BONDING CONDUCTOR CONNECTED TO ELECTRICAL SERVICE GROUNDING ELECTRODE. ALL BONDING CONDUCTORS SHALL TERMINATE TO BUS WITH TWO-HOLE COMPRESSION CRIMP LUGS SIZED FOR THE INDIVIDUAL CONDUCTORS. BOND RACK FRAME, CONDUIT SLEEVES, TRAY, EQUIPMENT AND ANY EXPOSED BUILDING STEEL TO BUS WITH #6 AWG COPPER WIRE WITH GREEN INSULATION.
10	PROVIDE 1-1/4" PVC CONDUIT FROM FLOOR BOX TO WALL AS SHOWN. CONDUIT SHALL RISE UP WALL AND STUB OUT INTO CEILING SPACE. ROUTE COMMUNICATIONS CABLING FROM BOX TO CEILING SPACE AND CONTINUE TO I.T. ROOM #115 SUPPORTED BY J-HOOKS.
11	PROVIDE HDMI OUTLET AND DATA IN FACE PLATE AT THE TV LOCATION AND DATA BOX. PROVIDE 1" CONDUIT FROM THE TV OUTLET BOX TO THE DATA (OC) BOX. PROVIDE HDMI CABLE BETWEEN THE TV OUTLET AND DATA OUTLET. PROVIDE TERMINATIONS FOR HDMI CABLE AT BOTH LOCATIONS.
12	PROVIDE AV SPEAKER VOLUME CONTROLLER AND AV CONTROLLER. SEE DETAILS ON SHEET E-600. COORDINATE LOCATIONS WITH POWER AND LIGHTING CONTROL DEVICE.
13	PROVIDE AV SYSTEM SWITCH ON WALL. SEE DETAIL SHEET E-600.

ROOM SCHEDULE

Number	Name
100	CIRCULATION
400	VESTIBULE
401	CORRIDOR
402	MENS
403	WOMENS
404	MEETING ROOM
405	COATS
406	STORAGE
407	CHILDREN AREA
408	CIRCULATION
409	ADULT AREA
410	TEEN AREA
411	WORK ROOM
412	OFFICE
413	STUDY
414	STUDY
415	CORRIDOR
416	STORAGE
417	JANITORS CLOSET
418	BREAK ROOM
419	MECH / ELEC
420	BOOK DROP

Scenic Regional Library
read, explore, grow

SCENIC REGIONAL LIBRARY
WRIGHT CITY BRANCH
60 WILDCAT DRIVE
WRIGHT CITY, MO 63390

JEMA
SDA ARCHITECTS

ARCHITECT
JEMA
3005 LOCUST ST.
ST. LOUIS, MO 63103
T (314) 531-7400
CONTACT: SCOTT CLARK
E-MAIL: SCLARK@JEMASTL.COM

ARCHITECT
SAPP DESIGN ASSOCIATES ARCHITECTS
3750 SOUTH FREMONT
SPRINGFIELD, MO 65804
T (417) 877-9600
F (417) 877-9696
CONTACT: JAMES STUFFLEBEAM
E: STUFFLEBEAM@SDAARCHITECTS.COM

CIVIL
COCHRAN
530A E. INDEPENDENCE DRIVE
UNION, MO 63084
CONTACT: DAVE VAN LEER
T (636) 584-0540
F (636) 584-0512
E-MAIL: DVANLEER@COCHRAN.COM

STRUCTURAL
ALPER AUDI, INC.
1804 BORMAN CIRCLE DRIVE
ST. LOUIS, MO 63146
T (314) 432-8600
F (314) 807-2774
CONTACT: STEVE EHRETT
E-MAIL: STEVE.EHRETT@ALPERAUDI.COM

MECHANICAL, ELECTRICAL, PLUMBING
BRIC PARTNERSHIP, LLC
343 S. KIRKWOOD ROAD, SUITE 204
KIRKWOOD, MO 63122
T (314) 725-5889
CONTACT: BRUCE COLEMAN
E: BCOLEMAN@BRICPARTNERSHIP.COM

ENGINEER OF RECORD:

PRELIMINARY
NOT FOR CONSTRUCTION

TODD L. KUNO
MO. LICENSE NO. 2015017018
BRIC MO CERTIFICATE OF AUTHORITY 2002028890

No.	Date	Description
	04/14/17	ISSUED FOR BID

DRAWN BY: **TLK**

PROJECT NUMBER: **16-1161.03**

SHEET TITLE:
FLOOR PLAN - FIRST FLOOR - ELECTRICAL DATA

E-401

THE PROFESSIONAL ENGINEER'S SEAL AFFIXED TO THIS SHEET APPLIES ONLY TO THE MATERIAL AND ITEMS SHOWN ON THIS SHEET. ALL DRAWINGS, INSTRUMENTS OR OTHER DOCUMENTS NOT EXHIBITING THIS SEAL SHALL NOT BE CONSIDERED PREPARED BY THIS ENGINEER, AND THIS ENGINEER EXPRESSLY DISCLAIMS ANY AND ALL RESPONSIBILITY FOR SUCH PLAN, DRAWINGS OR DOCUMENTS NOT EXHIBITING THIS SEAL.

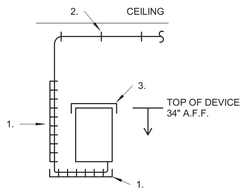

Notes:
1) PROVIDE CABLE MANAGEMENT SIMILAR TO LEGRAND CABLE FILL G-MINI FROM CABLE SIDE OF SWITCHER TO CEILING.
2) PROVIDE 1-1/2" O-RINGS TO SUPPORT CABLE ABOVE CEILING.
3) PROVIDE VERTICAL MOUNT FOR SWITCHER.

2 / E-801 AV SWITCH ELEVATIONS
N.T.S.

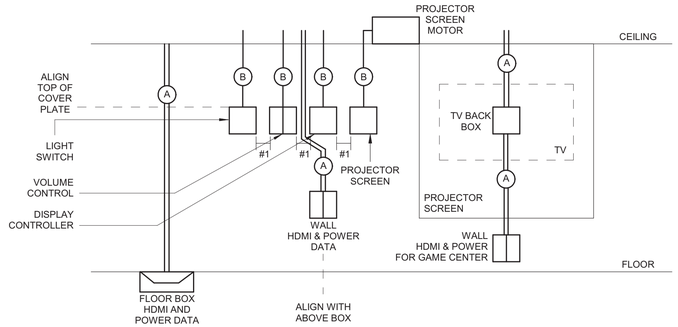

NOTES:
#1) SPACE BACK BOX SO THAT THERE IS 1" BETWEEN EACH COVER PLATE. PROVIDE THE REQUIRED BLOCKING TO MOUNT BOXES.

CONDUIT SIZE

TYPE	POWER	TYPE
A	(1) 3/4"	(1)1- 1/4"
B	-	(1)3/4"
C	(1) 3/4"	-

1 / E-801 AV DEVICE LAYOUT
N.T.S.

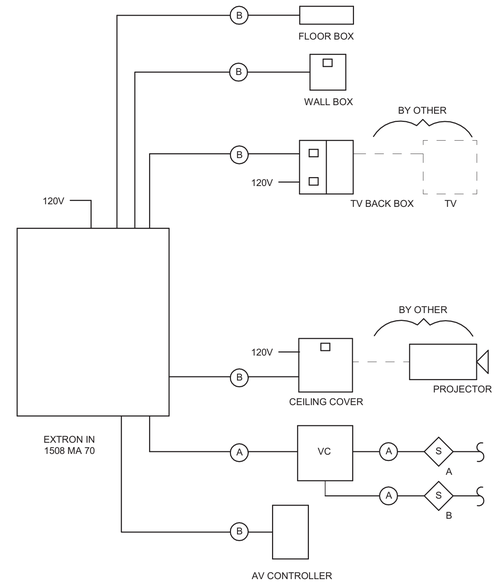

WIRE (#)
(A) - 70V PLENUM 2/#14 PAIR
(B) - HYBRID HDMI CABLE LIBERTY DL-HFC-##
(C) - STP-2P PLENUM RATED CONTROL WIRE
(D) - HDMI

AV CONTROLLER [EBP-IOS D]

FLOOR BOX
WALL
MUTE

S - CEILING SPEAKER- ATLAS FAPG3T-W [TAP AT 8W] [SEE FLOOR PLAN FOR NUMBER]

VC - VOLUME CONTROLLER- LOWELL 2SLVC

4 / E-801 A / V WIRE DIAGRAM
N.T.S.

LIGHTING CONTROL SYMBOLS

CAT5 CONTROL WIRE
120V CONDUCTORS
0-10V WIRE
LOAD CONTROLLER
LIGHT FIXTURE LOWER CASE IS SWITCH LEG
LOW VOLTAGE SWITCH AND SWITCH NUMBER
CEILING OCCUPANCY SENSOR

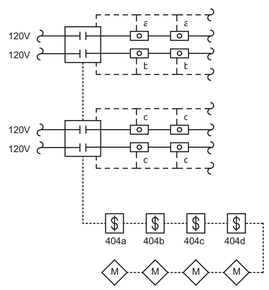

MEETING ROOM ONE-LINE

MEETING ROOM CONTROL

CONTROL DEVICE	BUTTONS	CIRCUIT CONTROL	CONTROL TYPE
404a	a b	a,b,c,d FUTURE	ALL ON/OFF - 100%
404b	a b	a,b FUTURE	ALL ON/OFF - 100%
404c	a b c d	c,d c d DIMMING	c,d - ON/OFF - 100% c - ON/OFF - 100% d - ON/OFF - 100% DIM SELECTED
404d	a b c d e f	a,b,c,d a b c d DIMMING	a,b,c,d - ON/OFF - 100% a - ON/OFF - 100% b - ON/OFF - 100% c - ON/OFF - 100% d - ON/OFF - 100% DIM SELECTED
M	OCCUPANCY SENSOR SHALL BE SET UP AS A VACANCY SENSOR, TO TURN OFF THE LIGHTS IN THE ROOM AFTER 30 MINUTES OF NO OCCUPANCIES SENSOR.		

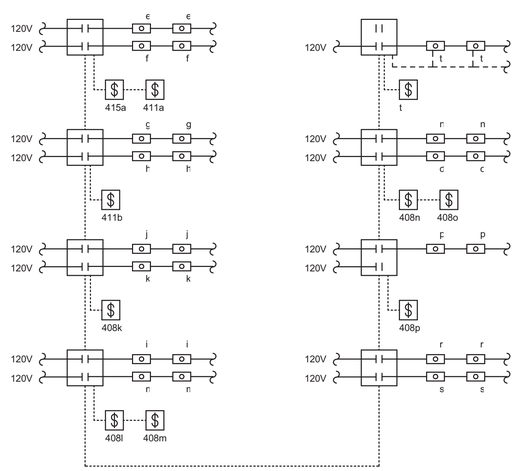

VESTIBULE, WORK ROOM, CIRCULATION ONE-LINE

MEETING ROOM CONTROL

CONTROL DEVICE	BUTTONS	CIRCUIT CONTROL	CONTROL TYPE
415a	a	e	ALL - ON/OFF - 100%
411a	a b	e f	e - ON/OFF - 100% f - ON/OFF - 100%
411b	a b c d e j	g,h,j,k,l,m,n,o,p,q,r,s g h s r j	ALL - ON/OFF - 100% g - ON/OFF - 100% h - ON/OFF - 100% s - ON/OFF - 100% r - ON/OFF - 100% j - ON/OFF - 100%
408k	a	k	k - ON/OFF - 100%
408l	a	l	l - ON/OFF - 100%
408m	a	m	m - ON/OFF - 100%
408n	a	n	n - ON/OFF - 100%
408o	a	o	o - ON/OFF - 100%
408p	a	p	p - ON/OFF - 100%
t	a b	t DIMMER	t - ON/OFF - 100%\ DIM t SWITH LEG
ALL LIGHTS SHALL BE CONTROLLED WITH A TIME CLOCK. COORDINATE HOURS WITH OWNER.			

3 / E-801 LIGHTING CONTROLS DIAGRAM
N.T.S.

Scenic Regional Library
read, explore, grow

SCENIC REGIONAL LIBRARY
WRIGHT CITY BRANCH
60 WILDCAT DRIVE
WRIGHT CITY, MO 63390

JEMA
SDA ARCHITECTS

ARCHITECT
JEMA
3005 LOCUST ST.
ST. LOUIS, MO 63103
T (314) 531-7400
CONTACT: SCOTT CLARK
E-MAIL: SCLARK@JEMASTL.COM

ARCHITECT
SAPP DESIGN ASSOCIATES ARCHITECTS
3750 SOUTH FREMONT
SPRINGFIELD, MO 65804
T (417) 877-9600
F (417) 877-9696
CONTACT: JAMES STUFFLEBEAM
E: STUFFLEBEAM@SDAARCHITECTS.COM

CIVIL
COCHRAN
530A E. INDEPENDENCE DRIVE
UNION, MO 63084
CONTACT: DAVE VAN LEER
T (636) 584-0540
F (636) 584-0512
E-MAIL: DVANLEER@COCHRAN.COM

STRUCTURAL
ALPER AUDI, INC.
1804 BORMAN CIRCLE DRIVE
ST. LOUIS, MO 63146
T (314) 432-8600
F (314) 807-2774
CONTACT: STEVE EHRETT
E-MAIL: STEVE.EHRETT@ALPERAUDI.COM

MECHANICAL, ELECTRICAL, PLUMBING
BRIC PARTNERSHIP, LLC
343 S. KIRKWOOD ROAD, SUITE 204
KIRKWOOD, MO 63122
T (314) 725-5889
CONTACT: BRUCE COLEMAN
E: BCOLEMAN@BRICPARTNERSHIP.COM

ENGINEER OF RECORD:

PRELIMINARY
NOT FOR CONSTRUCTION

TODD L. KUNO
MO. LICENSE NO. 2015017018
BRIC MO CERTIFICATE OF AUTHORITY 2002028690

No.	Date	Description
	04/14/17	ISSUED FOR BID

DRAWN BY: **TLK**

PROJECT NUMBER: **16-1161.03**

SHEET TITLE:
DETAILS - ELECTRICAL

E-801

THE PROFESSIONAL ENGINEER'S SEAL AFFIXED TO THIS SHEET APPLIES ONLY TO THE MATERIAL AND ITEMS SHOWN ON THIS SHEET. ALL DRAWINGS, INSTRUMENTS OR OTHER DOCUMENTS NOT EXHIBITING THIS SEAL SHALL NOT BE CONSIDERED PREPARED BY THIS ENGINEER, AND THIS ENGINEER EXPRESSLY DISCLAIMS ANY AND ALL RESPONSIBILITY FOR SUCH PLAN, DRAWINGS OR DOCUMENTS NOT EXHIBITING THIS SEAL.

MECHANICAL EQUIPMENT ELECTRICAL DATA SCHEDULE

PLAN MARK		DISCRIPTION / LOCATION	HORSEPOWER	APPARENT LOAD	VOLTAGE	PHASE	NEMA ENCL. TYPE	STARTER						DISCONNECT						CONTROL DEVICE		PANEL	FEEDER SIZE / RACEWAY	REMARKS
								FURNISHED BY	INSTALLED BY	TYPE	NEMA TYPE	AUXILIARY CONTACTS	LOCATION	FURNISHED BY	INSTALLED BY	TYPE	SWITCH SIZE	FUSE SIZE	LOCATION	FURNISHED BY	WIRE BY			
AHU	1	AIR HANDLER		28080 VA	208 V	3	NEMA 3R	EM	EM	-	-	-	IN UNIT	EC	EC	-	100 AMP	-	ON WALL	MC	MC	MAIN	(3)#1,(1)#8, 1 1/4"C.	
AHU	2	AIR HANDLER	-	10368 VA	208 V	3	NEMA 3R	EM	EM	-	-	-	IN UNIT	EC	EC	-	60 AMP	-	ON WALL	MC	MC	MAIN	(3)#8,(1)#10, 1"C.	-
CU	1	CONDENSING UNIT		3931 VA	208 V	1	NEMA 3R	EM	EM	-	-	-	IN UNIT	EC	EC	-	30 AMP	-	ON WALL	MC	MC	MAIN	(2)#8,(1)#10, 1"C.	
EWH	1	WATER HEATER		5500 VA	208 V	3	NEMA 1	EM	EM	-	-	-	IN UNIT	EC	EC	-	30 AMP	-	ON WALL	MC	MC	MAIN	(3)#10,(1)#10, 3/4"C.	
FC	1	FAN COIL		1140 VA	120 V	1	NEMA 1	EM	EM	-	-	-	IN UNIT	EC	EC	-	30 AMP	-	ON WALL	MC	MC	MAIN	(2)#12,(1)#12, 3/4"C.	

LEGEND

EC - ELECTRICAL CONTRACTOR
EM - EQUIPMENT MANUFACTURER
FVNR - FULL VOLTAGE NON REVERSING
MC - MECHANICAL CONTRACTOR
NF - NON FUSED
NI - NON INTERRUPTING
NO/NC - NORMALLY OPEN/NORMALLY CLOSED
TS - TOGGLE SWITCH

PANEL: MAIN — OC DEVICE TYPE: BREAKER — ENCLOSURE: NEMA 1 — MAINS: 400 MCP — CONTINOUS: 400 A
LOCATION: MECH / ELEC 115 — DEVICE FAMILY: BOLT ON — MOUNTING: WALL — WIRING: 3 PHASE 4 WIRE — BUS SC RATING: NEXT ABOVE CALC
FED FROM: — VOLTAGE: 120/208 Wye — FAULT CURRENT: 25672 AIC CALC

CKT	DESCRIPTION	Panel Notes	OC	P	A		B		C		P	OC	Panel Notes	DESCRIPTION	CKT
1	GEN MEETING ROOM 101		20 A	1	0 VA	3456 VA					3	45 A		AHU-2	2
3	REC		20 A	1			180 VA	3456 VA			--	--	--	--	4
5	REC MECH / ELEC 115		20 A	1					180 VA	3456 VA	--	--	--	--	6
7	AHU-3		20 A	1	1140 VA	1833 VA					3	20 A		EWH-1	8
9	CU-1		30 A	2			1966 VA	1833 VA			--	--	--	--	10
11	--	--	--	--					1966 VA	1833 VA	--	--	--	--	12
13	LTS CIRCULATION 100		20 A	1	482 VA	516 VA					1	20 A		LTS CIRCULATION 100	14
15	LTS CIRCULATION 100		20 A	1			378 VA	378 VA			1	20 A		LTS CIRCULATION 100	16
17	LTS CIRCULATION 100		20 A	1					1416 VA	1465 VA	1	20 A		LTS CIRCULATION 100	18
19	LTS MEETING ROOM 101		20 A	1	550 VA	212 VA					1	20 A		LTS ST. 102/ RESTROOMS 104, 103	20
21	LTS WORK ROOM 108/ST/MECH/ELEC/STUDY		20 A	1			964 VA	400 VA			1	20 A		LTS BUILDING	22
23	EGRESS LIGHTING		20 A	1					51 VA	376 VA	1	20 A		LTS SITE	24
25	REC MECH/ELEC		20 A	1	360 VA	720 VA					1	20 A		REC WORK ROOM 108	26
27	REC WORK ROOM COUNTER		20 A	1			900 VA	1080 VA			1	20 A		REC STUDY 109/110	28
29	REC BRK RM 111		20 A	1					540 VA	180 VA	1	20 A		REC BRK RM 111 REFRIGERATOR	30
31	GEN CORRIDOR 105		20 A	1	0 VA	720 VA					1	20 A		REC CIRCULATION 100 FLOOR BOXES	32
33	REC CIRCULATION 100/FLOOR BOXES		20 A	1			1080 VA	540 VA			1	20 A		REC CIRCULATION 100 FLOORB BOXES	34
35	REC CORRIDOR 105		20 A	1					900 VA	1260 VA	1	20 A		REC MEETING ROOM 101	36
37	REC MEETING ROOM 101		20 A	1	900 VA	540 VA					1	20 A		REC CIRCULATION 100	38
39	REC WOMENS 104/MEN 103/WC		20 A	1			540 VA	360 VA			1	20 A		REC CIRCULATION 100 COUNTER TOP	40
41	REC CIRCULATION 100 FLOOR BOXES		20 A	1					1080 VA	1080 VA	1	20 A		REC CIRCULATION 100 FLOOR BOXES	42
43	REC CIRCULATION 100 FLOOR BOXES		20 A	1	720 VA	540 VA					1	20 A		REC BUILDING POWER	44
45	REC BUILDING POWER		20 A	1			540 VA	540 VA			2	20 A		REC CIRCULATION 100 FLOOR BOXES	46
47	REC MEETING ROOM 101		20 A	1					180 VA	540 VA	--	--	--	--	48
49	REC MEETING ROOM 101		20 A	1	720 VA	0 VA					1	20 A		GEN WOMENS 104	50
51	GEN MENS 103		20 A	1			0 VA	180 VA			1	20 A		REC	52
53	REC MEETING ROOM 101		20 A	1					180 VA	0 VA	1	20 A	--	Spare	54
55	GEN VESTIBULE ADA		20 A	1	0 VA	0 VA					1	20 A	--	Spare	56
57	ADA DOOR		20 A	1			0 VA	0 VA			1	20 A	--	Spare	58
59	Spare	--	20 A	1					0 VA	0 VA	1	20 A	--	Spare	60
61	Spare	--	20 A	1	0 VA	0 VA					1	20 A	--	Spare	62
63	Spare	--	20 A	1			0 VA	0 VA			1	20 A	--	Spare	64
65	Spare	--	20 A	1					0 VA	0 VA	1	20 A	--	Spare	66
67	Spare	--	20 A	1	0 VA	0 VA					1	20 A	--	Spare	68
69	Spare	--	20 A	1			0 VA	0 VA			1	20 A	--	Spare	70
71	Spare	--	20 A	1					0 VA	0 VA	1	20 A	--	Spare	72
73	Spare	--	20 A	1	0 VA	0 VA					1	20 A	--	Spare	74
75	Spare	--	20 A	1			0 VA	0 VA			1	20 A	--	Spare	76
77	Spare	--	20 A	1					0 VA	0 VA	1	20 A	--	Spare	78
79	Spare	--	20 A	1	0 VA	0 VA					1	20 A	--	Spare	80
81	Spare	--	20 A	1			0 VA	0 VA			1	20 A	--	Spare	82
83	Spare	--	20 A	1					0 VA	0 VA	1	20 A	--	Spare	84
					13409 VA		15316 VA		16682 VA						
					112 A		130 A		141 A						

TOTAL CONNECTED LOAD:	45407 VA	TOTAL CONNECTED AMPS:	126 A
TOTAL DEMAND LOAD:	41767 VA	TOTAL DEMAND AMPS:	116 A

Scenic Regional Library
read, explore, grow

SCENIC REGIONAL LIBRARY
WRIGHT CITY BRANCH
60 WILDCAT DRIVE
WRIGHT CITY, MO 63390

JEMA learning architecture interior design
SDA ARCHITECTS

ARCHITECT
JEMA
3005 LOCUST ST.
ST. LOUIS, MO 63103
T (314) 531-7400
CONTACT: SCOTT CLARK
E-MAIL: SCLARK@JEMASTL.COM

ARCHITECT
SAPP DESIGN ASSOCIATES ARCHITECTS
3750 SOUTH FREMONT
SPRINGFIELD, MO 65804
T (417) 877-9600
F (417) 877-9696
CONTACT: JAMES STUFFLEBEAM
E: STUFFLEBEAM@SDAARCHITECTS.COM

CIVIL
COCHRAN
530A E. INDEPENDENCE DRIVE
UNION, MO 63084
CONTACT: DAVE VAN LEER
T (636) 584-0540
F (636) 584-0512
E-MAIL: DVANLEER@COCHRAN.COM

STRUCTURAL
ALPER AUDI, INC.
1804 BORMAN CIRCLE DRIVE
ST. LOUIS, MO 63146
T (314) 432-8600
F (314) 807-2774
CONTACT: STEVE EHRETT
E-MAIL: STEVE.EHRETT@ALPERAUDI.COM

MECHANICAL, ELECTRICAL, PLUMBING
BRIC PARTNERSHIP, LLC
343 S. KIRKWOOD ROAD, SUITE 204
KIRKWOOD, MO 63122
T (314) 725-5889
CONTACT: BRUCE COLEMAN
E: BCOLEMAN@BRICPARTNERSHIP.COM

ENGINEER OF RECORD:

PRELIMINARY
NOT FOR CONSTRUCTION

TODD L. KUNO
MO. LICENSE NO. 2015017018
BRIC MO CERTIFICATE OF AUTHORITY 2002028890

No.	Date	Description
	04/14/17	ISSUED FOR BID

DRAWN BY: **TLK**

PROJECT NUMBER: **16-1161.03**

SHEET TITLE:
SCHEDULES - ELECTRICAL

E-901